Liebert® Air-Cooled, Direct-Drive Drycoolers

50 Hz & 60 Hz

Technical Design Manual

Technical Support Site

If you encounter any installation or operational issues with your product, check the pertinent section of this manual to see if the issue can be resolved by following outlined procedures. Visit https://www.VertivCo.com/en-us/support/ for additional assistance.

TABLE OF CONTENTS

1 INTRODUCTION

1.1 Product Description and Features

The Liebert drycooler is a low-profile, direct-drive propeller fan-type air-cooled unit. Constructed with an aluminum cabinet and a copper-tube aluminum fin coil, the unit is quiet and corrosion resistant. All electrical connections and controls are enclosed in an integral NEMA 3R rated electrical panel section of the drycooler.

Figure 1.1 Liebert 3-fan drycooler

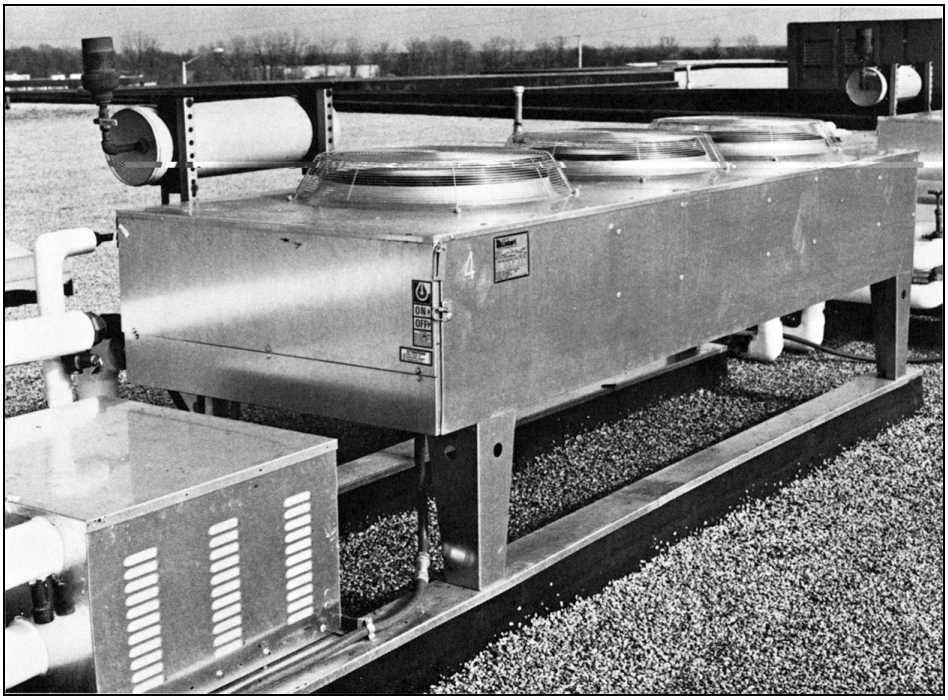

1.2 Agency Listed

Standard 60Hz units are CSA certified to the harmonized U.S. and Canadian product safety standard, CSA C22.2 No 236/UL 1995 for "Heating and Cooling Equipment" and are marked with the CSA c-us logo.

1.3 Site Considerations

When considering installation locations, consider that these units reject heat into the atmosphere and should be located in a clean air area, away from loose dirt and foreign matter that may clog the coil. The drycoolers and pumps should be installed in a location offering maximum security and access for maintenance. Avoid ground level sites with public access and areas that are subject to heavy snow or ice accumulations and sites in the vicinity of steam, hot air or fume exhausts. Drycoolers should be located no closer than 3 feet from a wall, obstruction or adjacent unit. There should be no obstructions over the unit. Drycoolers must not be installed in a pit, where discharge air is likely to be recirculated through the drycooler or installed where objects restrict the air inlet free area.

The drycooler must be installed on a level surface to ensure proper glycol flow, venting and drainage. For roof installation, mount the drycooler on suitable curbs or other supports in accordance with local codes. To minimize sound and vibration transmission, mount steel supports across load-bearing walls. Utilize Piggyback drycoolers whenever interior building locations must be used.

Allow adequate space for pump packages, expansion/compression tanks, piping and additional field supplied devices. When mounting pump packages, mount on level surface or suitable curbs that will allow cooling ventilation air to enter from underneath the pump package frame and exit through the louvers.

Figure 1.2 Product model nomenclature

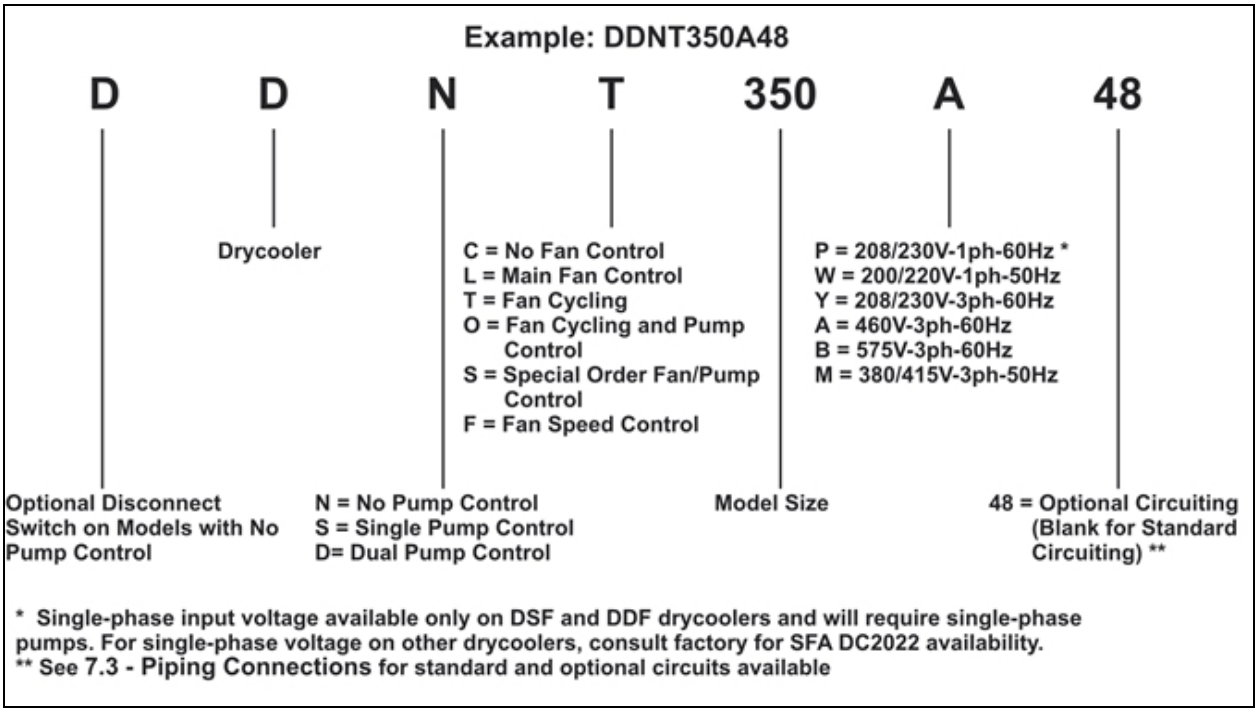

2 STANDARD FEATURES

2.1 Standard Features—All Drycoolers

Liebert drycoolers consist of drycooler coil(s), housing, propeller fan(s) direct-driven by individual fan motor(s), electrical controls and mounting legs. Liebert air-cooled drycoolers provide for heat rejection needs of glycol-cooled Thermal Management units by using outdoor air to remove heat from circulating water/glycol mixtures and to maintain water/glycol temperatures within designed and controlled ranges. Various control methods are employed to match indoor unit type, indoor unit to drycooler/pump combinations and maximum sound requirements.

2.1.1 Drycooler Coil

Liebert-manufactured coils are constructed of copper tubes in a staggered tube pattern. Tubes are expanded into continuous, corrugated aluminum fins. The fins have full-depth fin collars completely covering the copper tubes, which are connected to heavy wall Type “L” headers. Inlet coil connector tubes pass through relieved holes in the tube sheet for maximum resistance to piping strain and vibration. Coil circuit options can be selected and factory built to provide the right combination of heat transfer and pressure drop for the glycol system. The glycol supply and return pipes are either spun shut (1-4 fan) or capped (6-fan and 8-fan) at the factory and include a factory-installed Schrader valve. Coils are factory leak-tested at a minimum of 300 psig (2068kPag), dehydrated, then filled with an inert gas holding charge for shipment and sealed.

2.1.2 Housing

The condenser housing is fabricated from bright aluminum sheet and divided into individual fan sections by full-width baffles. Structural support members, including coil support frame, motor and drive support, are galvanized steel for strength and corrosion resistance. Aluminum legs are provided for mounting the unit for vertical discharge and have rigging holes for hoisting the unit into position. The unit’s electrical panel is inside an integral NEMA 3R weatherproof section of the housing.

2.1.3 Propeller Fan

Aluminum propeller fan blades are secured to a corrosion-protected steel hub. Fan guards are heavy gauge, close-meshed steel wire with corrosion-resistant polyester paint finish rated to pass a 1000-hour salt spray test. Fans are secured to the fan motor shaft by a keyed hub and dual setscrews. Fan diameter is 26" (660mm) or less. The fans are factory-balanced and run before shipment.

2.1.4 Fan Motor

The drycooler’s fan motor is a continuous air-over design equipped with rain shield and permanently sealed bearing. Die-formed, galvanized steel supports are used for rigid mounting of the motor.

2.1.5 Electrical Controls

Electrical controls, overload protection devices and service connection terminals are factory-wired inside the integral electrical panel section of the housing. A locking disconnect switch is factory-mounted and wired to the electrical panel and controlled via an externally mounted locking door handle. An indoor unit interlock circuit enables drycooler operation whenever the indoor unit’s compressors are active. Supply wiring and indoor unit interlock wiring are required at drycooler installation, along with any pumps controlled by the drycooler’s electrical panel.

This page intentionally left blank.

3 SPECIFIC DRYCOOLER TYPES—FEATURES

3.1 Drycooler Control Types and Control Options

3.1.1 Fan Speed—DSF, DDF

Available only on single-fan standard drycoolers with integral pump controls. Fan speed control provides an infinite number of speed variations on specially designed, single-phase, permanent split capacitor motor, by monitoring leaving fluid temperature. Fan speed control provides air delivery in direct proportion to heat rejection requirements of the system. The control is adjustable to maintain the temperature of the fluid leaving the drycooler.

Either of two temperature ranges may be field-selected: 30 to 60°F (-1 to 16°C) for GLYCOOL™ applications or 70 to 100°F (21 to 38°C) for glycol applications.

3.1.2 Fan Cycling Control—(D)DNT, DSO, DDO

Available on all sizes of standard sound and Liebert Quiet-Line™ drycoolers. A thermostatic control cycles the fan on a single-fan drycooler in response to leaving fluid temperatures. Two or more thermostats are employed on drycoolers with two or more fans to cycle fans or groups of fans in response to leaving fluid temperatures. The thermostat setpoints are listed on the factory-supplied schematic. They typically range from 35 to 45°F (2 to 7°C) for GLYCOOL applications and 65 to 75°F (18 to 24°C) for glycol applications.

3.1.3 Main Fan Control—(D)DNL

Available for drycoolers without pump controls. All fans run when an external contact closure completes internal 24VAC circuit.

3.1.4 No Controls—(D)DNC

Available on all drycoolers without pump controls. All fans are activated at full speed when power is applied to the drycooler.

3.1.5 Pump Controls

Available on all Fan Speed and DSO/DDO Fan Cycling Control drycoolers. Controls for pump up to 7.5hp are built into the same integral electric panel as the drycooler fan controls. Pump fuses, overload heaters and flow switch (dual pump control models) are included with the Liebert pump packages or must be field-supplied for field-supplied pumps.

Dual Pump Option—Provides controls for primary and standby pump. The flow switch senses loss of flow and switches to the standby pump for continuous system operation in the event of a pump failure. An internal switch allows manual selection of the lead/lag pump.

3.2 Sound Level Options

3.2.1 Standard Drycoolers

All Fan Speed, Fan Cycling, Main Fan and No Control drycoolers are standard drycoolers with moderate operating sound levels.

3.2.2 Liebert Quiet-Line Drycoolers

Liebert Quiet-Line drycoolers can help meet the strictest noise codes and do so at less cost than traditional drycoolers with acoustic shielding. Liebert Quiet-Line drycoolers utilize the same reliable construction features of the standard drycoolers and have oversized coils and slower speed fan motors that yield the required heat rejection needed at significantly lower sound levels.

Liebert Quiet-Line Drycoolers are available on Fan Cycling (with and without Pump Controls), Main Control and No Control Drycoolers.

4 TYPICAL SYSTEM CONFIGURATIONS

The standard glycol-cooled Precision Cooling system includes these major components:

- Indoor air conditioning unit with heat exchangers (refrigerant/glycol)
- Glycol regulating valve
- Outdoor air-cooled drycooler
- Glycol pump(s)
- Expansion/compression tank
- Pump controls
- Interconnection piping
- Unit interlock control wiring

Figure 4.1 on the next page and Figure 4.6 on page 17 show a single unit to drycooler loop arrangement. Figure 4.9 on page 20 shows a typical configuration of multiple indoor units and multiple outdoor drycoolers using a dual pump package and on a common piping loop. Additional field-supplied components, such as valves, expansion tank, strainers and flow or pressure switches are also shown in Figure 4.1 on the next page, Figure 4.5 on page 16 and Figure 4.9 on page 20. These components are necessary and should be included when designing a system with one indoor and one outdoor unit on a piping loop or a system using multiple indoor and outdoor units on a common piping loop. Larger systems may also benefit from an air separator (not shown).

Figure 4.1 Piping diagram, Liebert DS™ with glycol with semi-hermetic compressor models

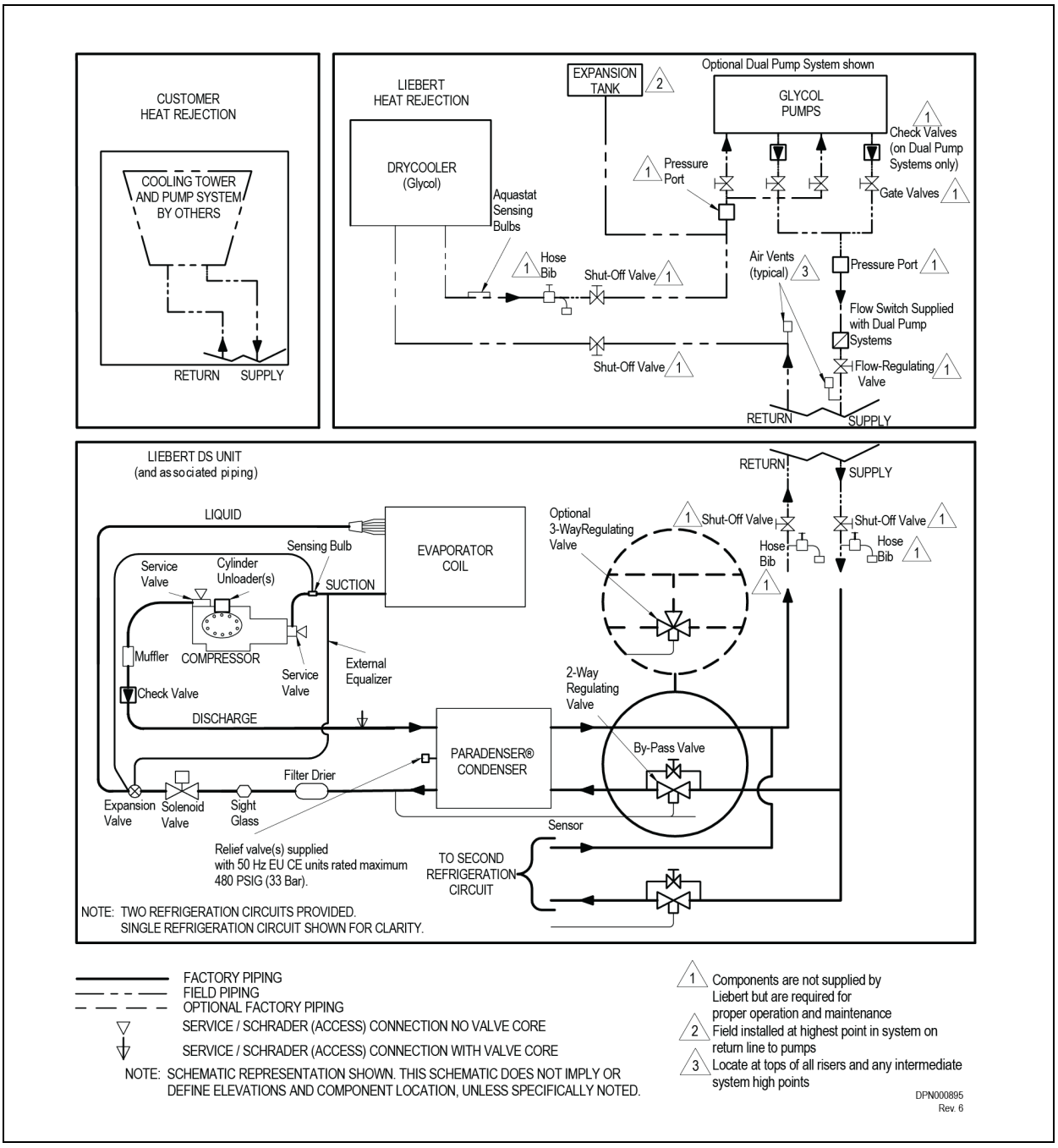

Figure 4.2 Piping diagram, Liebert DS™ with water/glycol with semi-hermetic compressor models

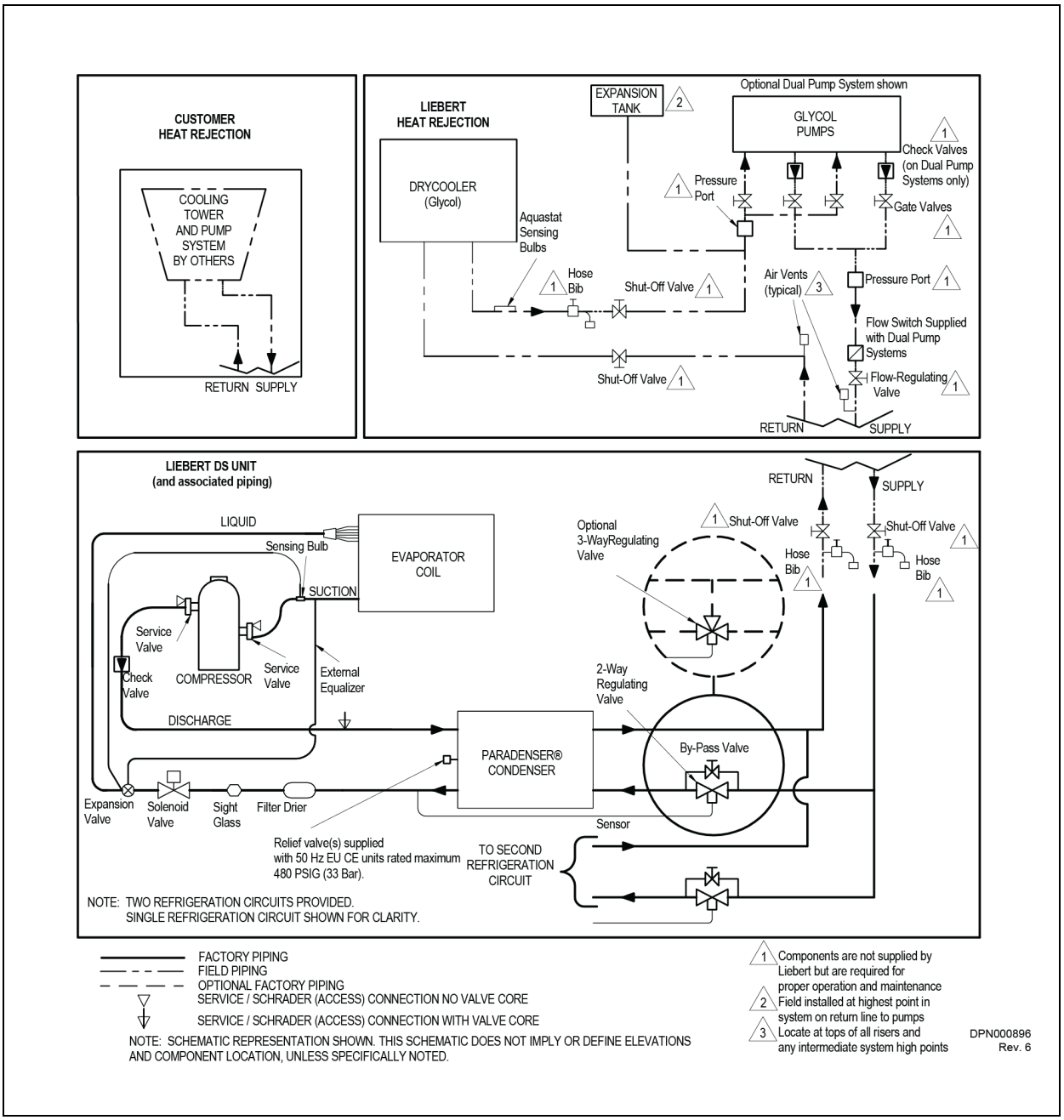

Figure 4.3 Piping diagram, Liebert DS™ with water/glycol with digital scroll compressor models

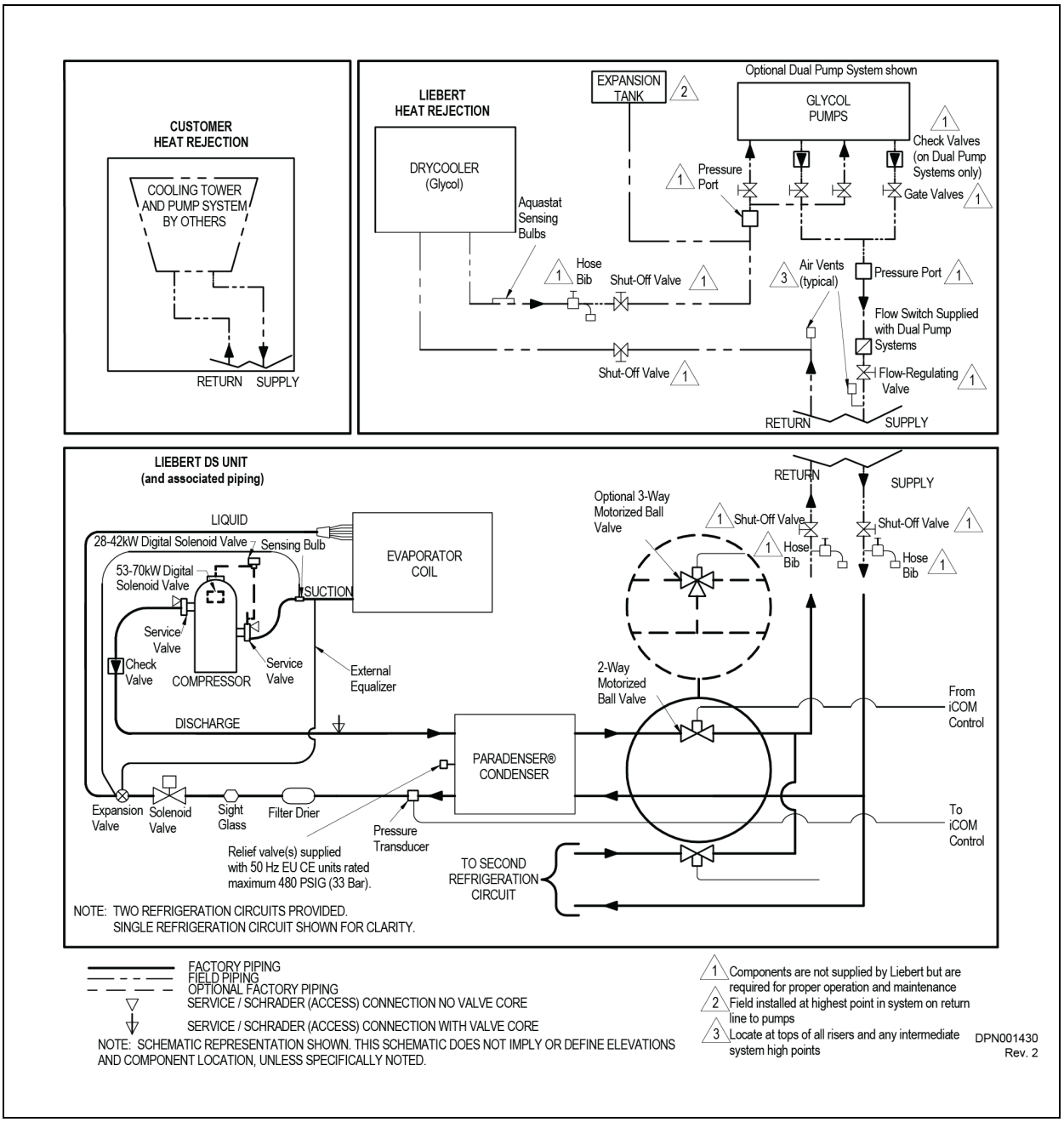

Figure 4.4 Piping diagram, Liebert DS™ with GLYCOOL with semi-hermetic compressor models

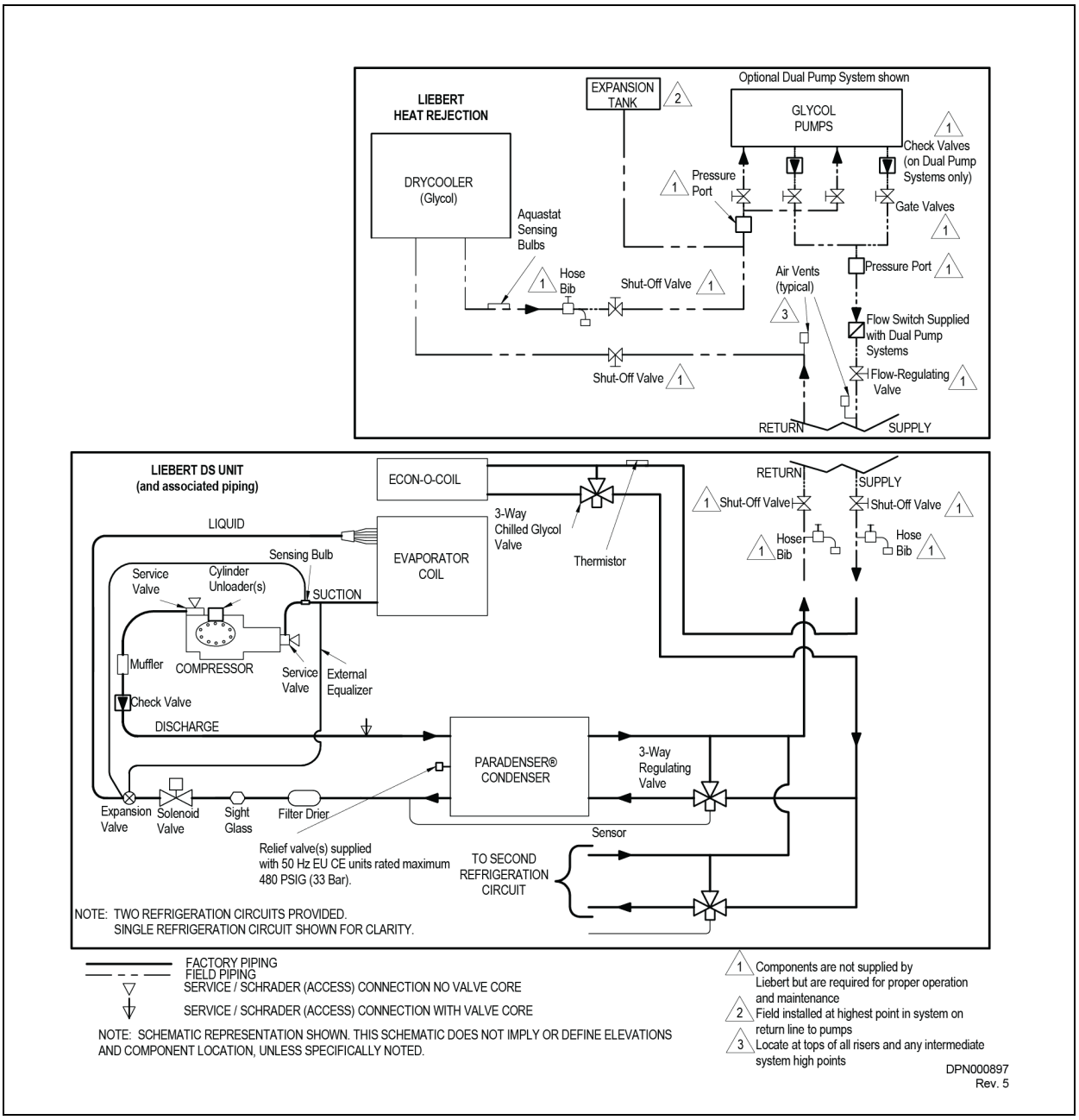

Figure 4.5 Piping diagram, Liebert DS™ with GLYCOOL with scroll compressor models

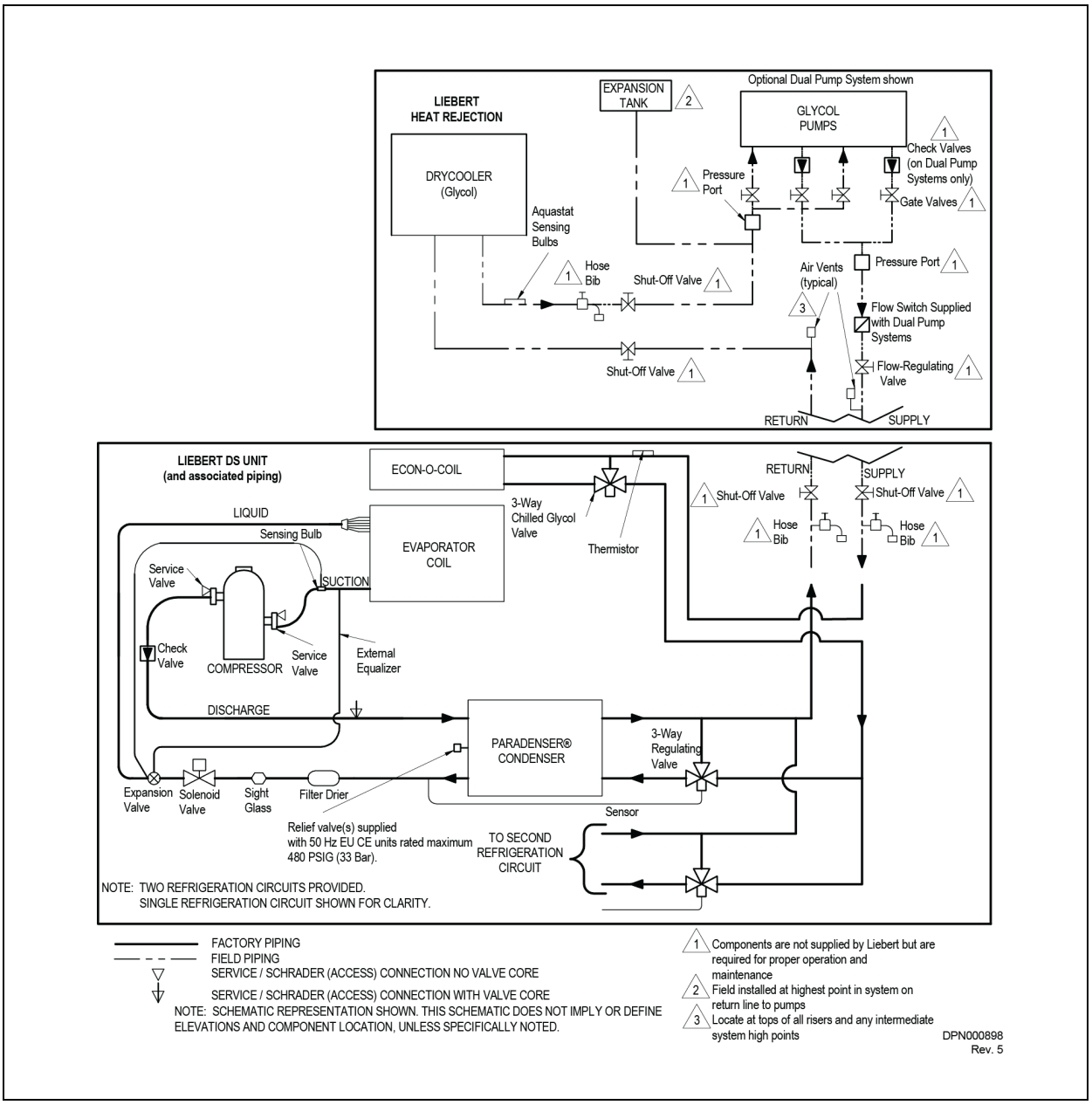

Figure 4.6 Piping diagram, Liebert DS™ with GLYCOOL with digital scroll compressors

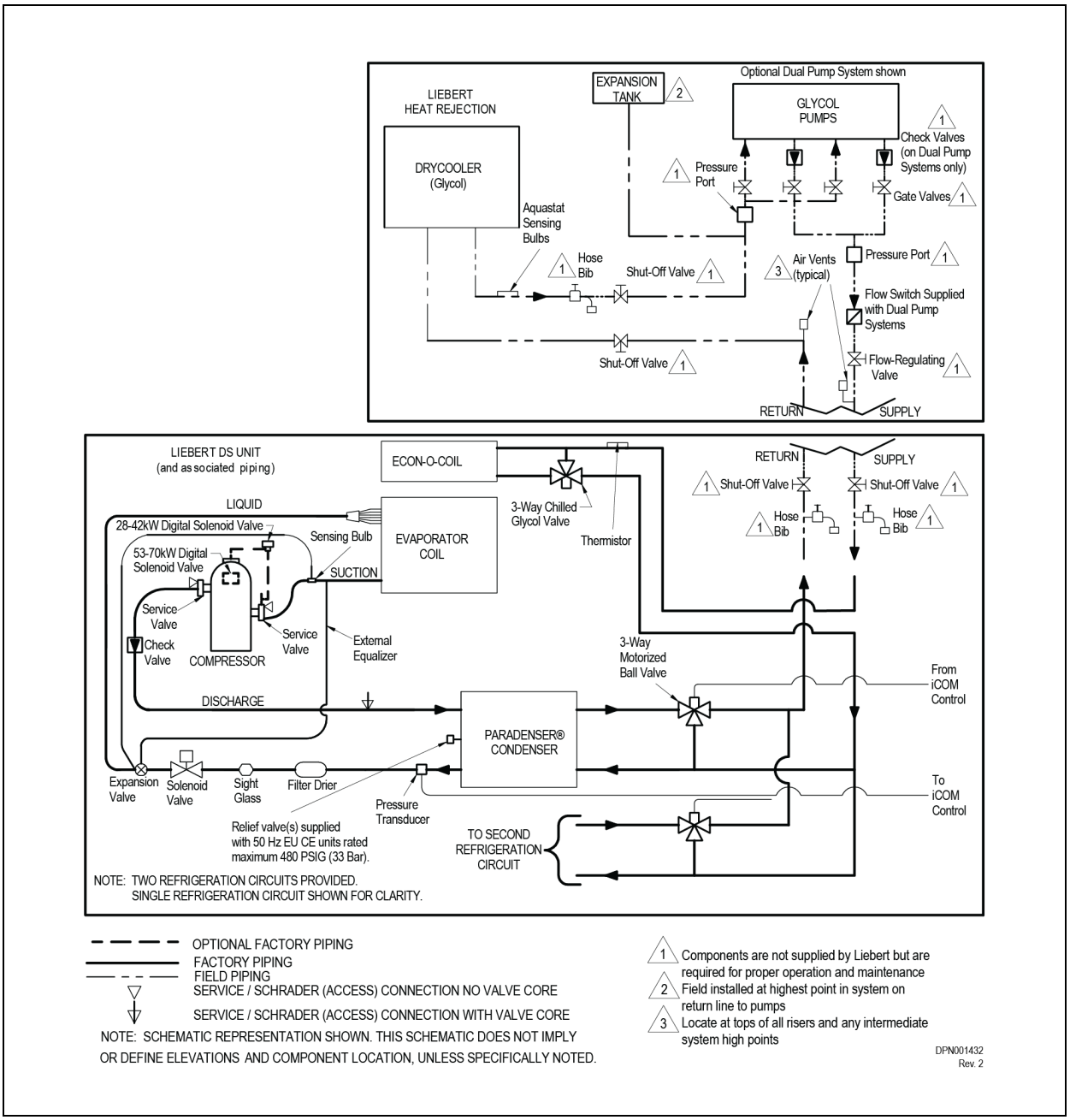

Figure 4.7 Piping diagram, Liebert PDX™ with water/glycol

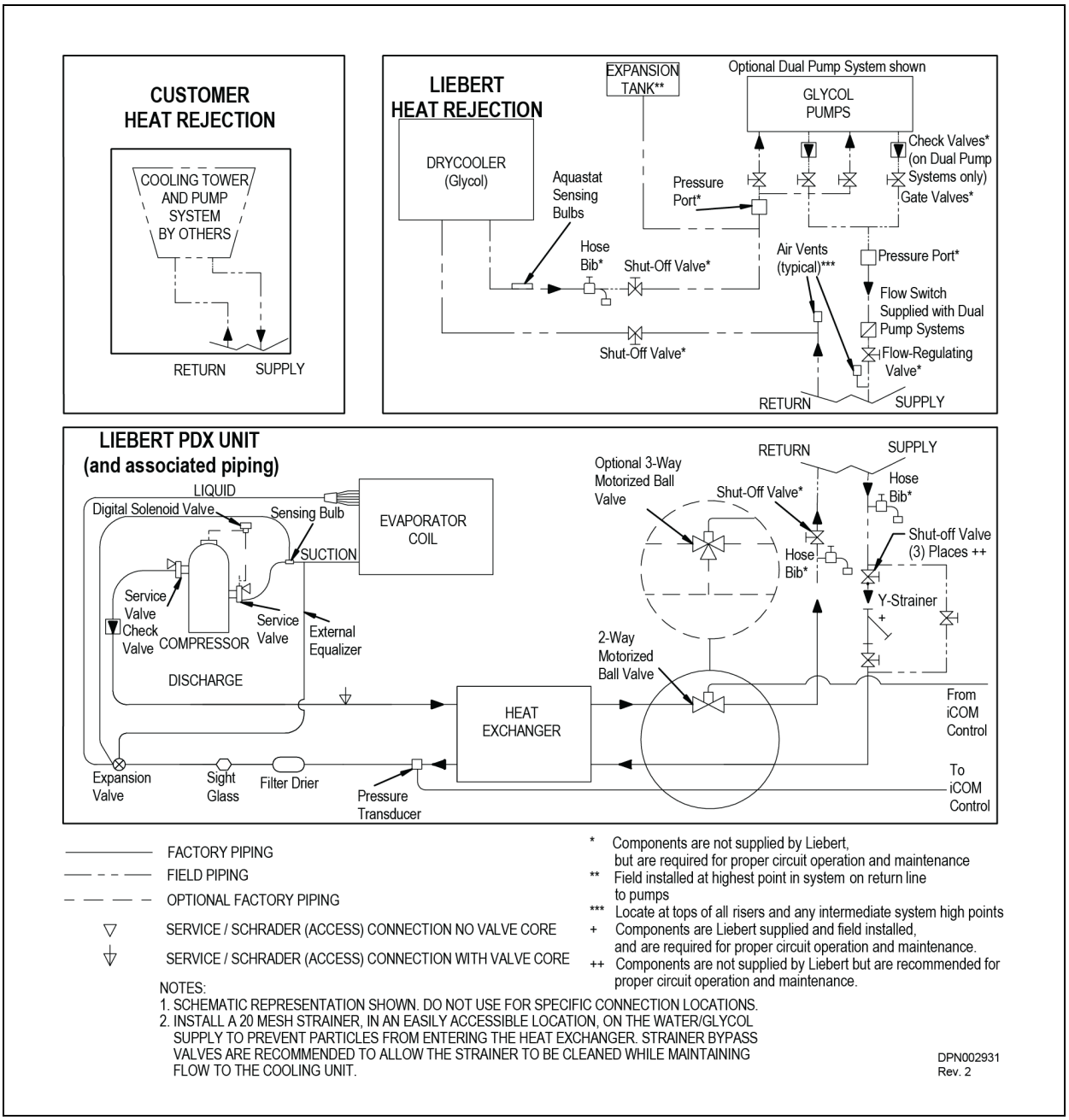

Figure 4.8 Piping diagram, Liebert PDX™ with GLYCOOL

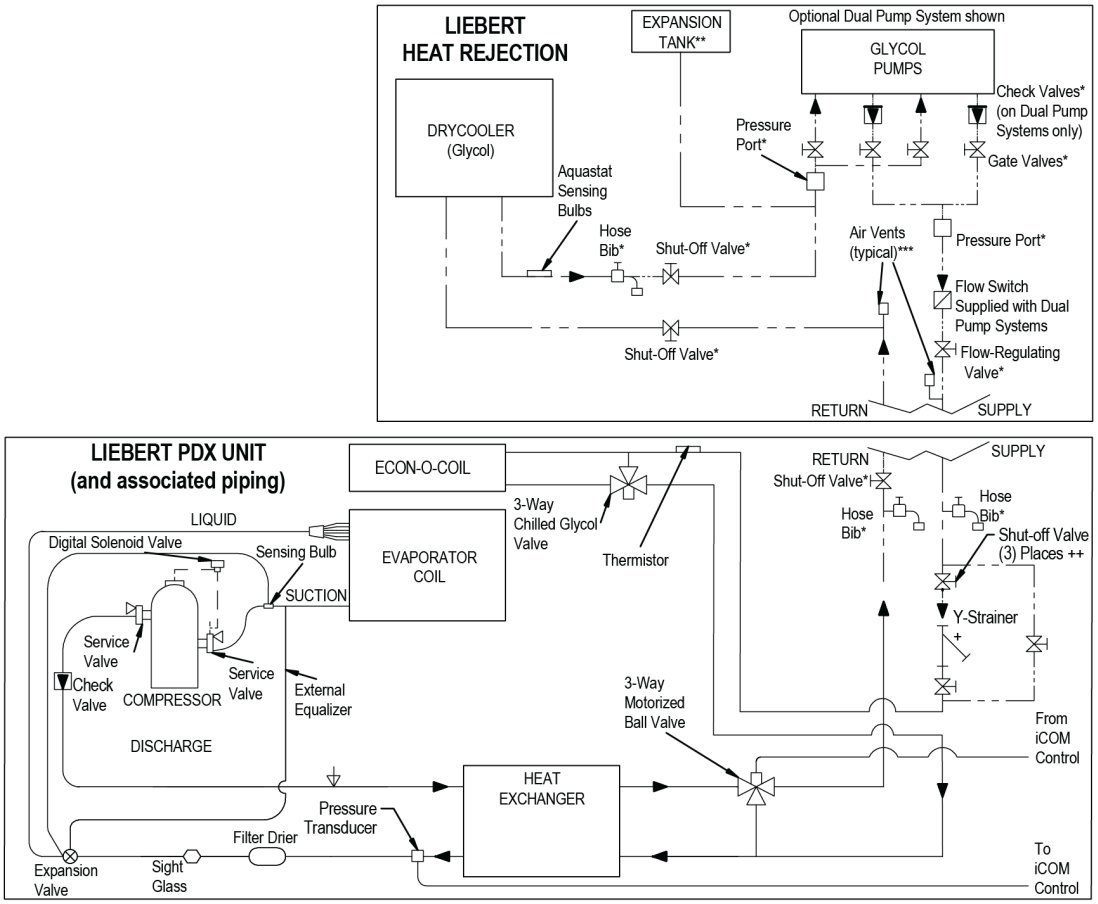

Figure 4.9 Typical piping arrangement, multiple drycoolers and multiple indoor units

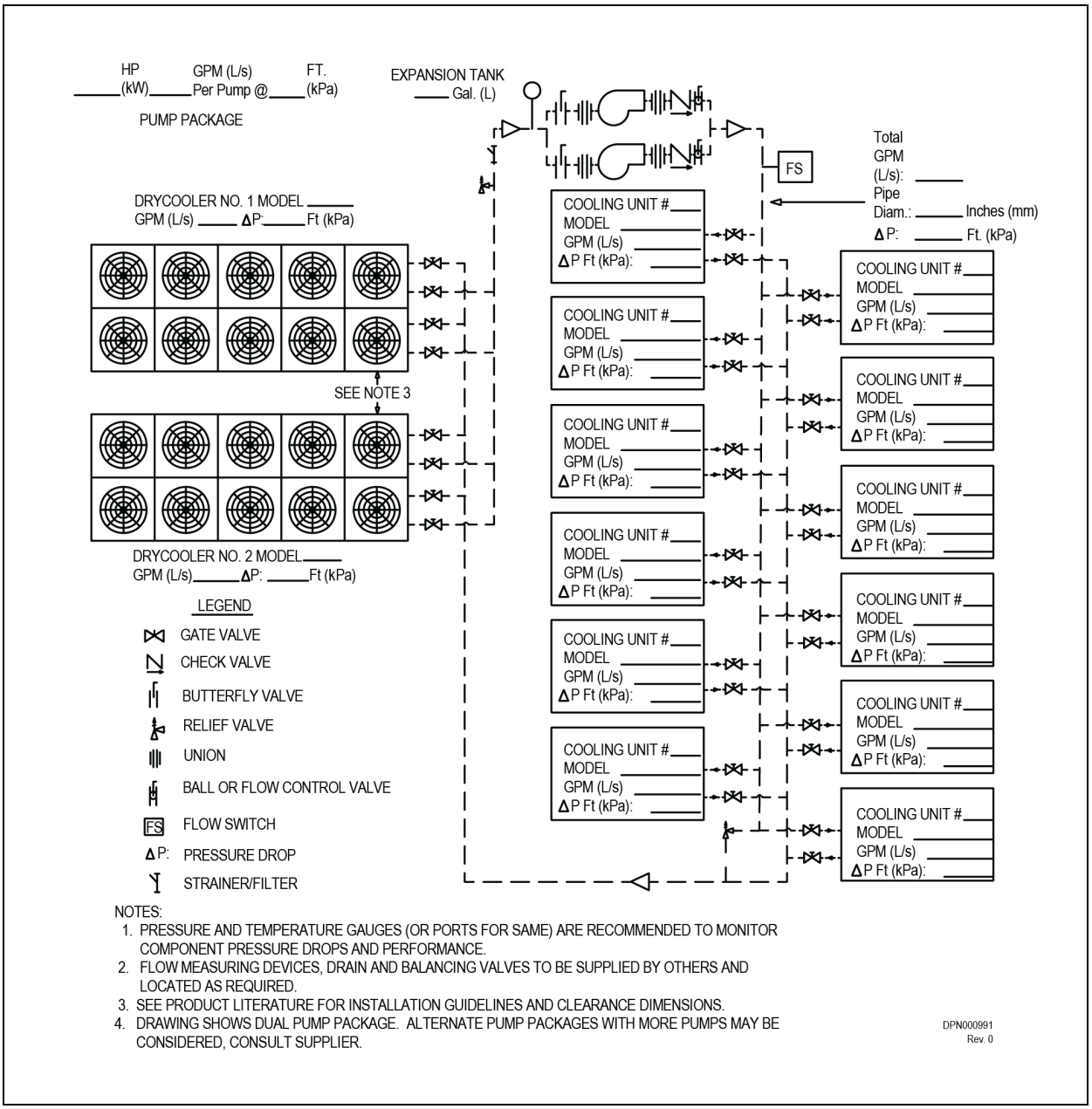

5 DRYCOOLER PERFORMANCE DATA & SELECTION

Table 5.1 Drycooler performance data, 60Hz

Standard Unit (Circuits) Data				Fans Direct Drive						
Model Number *D**	Total Heat Rejection, kBtuh (kW) @25F ITD	Glycol Flow Rate, GPM (lpm)	Pressure Drop, Ft. H_20 (kPa)	No. of Internal Circuits (Std.)	No. of Fans	Blade Diameter, in (cm)	Rated Motor hp	Air Flow (CFM)	Sound Power, LwA	Sound Pressure, dBA**
Standard Models										
033	38 (11.1)	10 (38)	9.1 (27)	4	1	26 (66)	3/4	7200	86.5	72.5
069	67 (19.6)	20 (76)	8.9 (27)	8				6870	86.5	72.5
092	92 (27.1)	30 (114)	8.6 (26)	12				6600	86.5	72.5
109	109 (31.9)	40 (152)	8.1 (24)	16				6300	86.5	72.5
112	118 (34.6)	40 (152)	10.1 (30)	16				6090	86.5	72.5
139	134 (39.3)	40 (152)	7.1 (21)	16	2			13700	91.0	75.5
174	173 (50.8)	40 (152)	10.5 (31)	16				13300	91.0	75.5
197	197 (57.7)	40 (152)	13.9 (42)	16				12645	91.0	75.5
225	231 (67.7)	65 (246)	10.9 (33)	26				12200	91.1	75.5
260	260 (76.3)	60 (227)	10.1 (30)	24	3			19900	94.0	77.3
310	311 (91.0)	80 (303)	9.8 (29)	32				19000	94.0	77.3
350	353 (103)	80 (303)	14.6 (44)	32				17400	94.0	77.3
352	328 (96.2)	60 (227)	12.9 (39)	24	4			24800	94.4	78.5
419	394 (115)	80 (303)	12.7 (38)	32				23650	94.4	78.5
466	441 (129)	100 (379)	12.7 (38)	40				22800	94.4	78.5
491	469 (137)	120 (455)	12.8 (38)	48				21700	94.4	78.5
620	621 (182)	160 (606)	9.8 (29)	64	6			37900	96.8	80.3
650	652 (191)	130 (493)	15.2 (45)	52				36500	96.8	80.3
700	706 (207)	160 (606)	14.6 (44)	64				34800	96.8	80.3
790	787 (231)	160 (606)	12.7 (38)	64	8			47300	97.4	81.5
880	882 (258)	200 (758)	12.7 (38)	80				45500	97.4	81.5
940	938 (275)	240 (910)	12.5 (37)	96				43400	97.4	81.5
Liebert Quiet-Line™ Models										

Table 5.1 Drycooler performance data, 60Hz (continued)

Standard Unit (Circuits) Data				Fans Direct Drive						
Model Number *D**	Total Heat Rejection, kBtuh (kW) @25F ITD	Glycol Flow Rate, GPM (lpm)	Pressure Drop, Ft. H_20 (kPa)	No. of Internal Circuits (Std.)	No. of Fans	Blade Diameter, in (cm)	Rated Motor hp	Air Flow (CFM)	Sound Power, LwA	Sound Pressure, dBA**
040	44 (13.0)	20 (76)	8.8 (26)	8	1	26 (66)	1/4	3110	68.9	56.5
057	57 (16.7)	30 (114)	8.6 (26)	12				2990	68.9	56.5
060	63 (18.4)	40 (152)	8.1 (24)	16				2840	68.9	56.5
080	89 (26.0)	40 (152)	7.0 (21)	16	2			6220	72.6	59.5
111	111 (32.5)	40 (152)	10.4 (31)	16				5980	72.6	59.5
121	121 (35.4)	40 (152)	13.7 (41)	16				5680	72.6	59.5
158	166 (48.7)	60 (227)	10.0 (30)	24	3			8970	74.8	61.3
173	185 (54.2)	80 (303)	9.7 (29)	32				8520	74.8	61.3
178	186 (54.5)	80 (303)	14.5 (43)	32				7440	74.8	61.3
205	219 (64.2)	60 (227)	12.9 (39)	24	4			11680	76.2	62.5
248	248 (72.8)	80 (303)	12.5 (37)	32				11360	76.2	62.5
347	369 (108)	160 (606)	9.8 (29)	64	6			17040	78.4	64.3
356	372 (109)	160 (606)	14.6 (44)	64				14880	78.4	64.3
453	496 (145)	160 (606)	12.6 (38)	64	8			22720	79.9	65.5
498	505 (148)	240 (910)	12.4 (37)	96				19840	79.9	65.5

Standard data based on 95 °F (35 °C) EAT, 120 °F (48.9 °C) EFT, 40% E.G.
Capacity shown is drycooler THR at sea level.
Sound Pressure is dBA @ 5ft (1.5m)

Table 5.2 Drycooler performance data, 50Hz

Model Number *D**	Standard Circuits Data				Fans Direct Drive					
	Total Heat Rejection, kBtuh (kW) @ 25F ITD	Glycol Flow Rate, GPM (lpm)	Pressure Drop, Ft. H_2O (kPa)	No. of Internal Circuits (Std.)	No. of Fans	Blade Diameter, in (cm)	Rated Motor hp	Air Flow (CFM)	Sound Power, LwA	Sound Pressure, dBA**
Standard Models										
033	35 (10.3)	10 (38)	9.1 (27)	4	1	26 (66)	3/4	6000	82.5	69.1
069	60 (17.4)	20 (76)	8.9 (27)	8				5700	82.5	69.1
092	82 (23.9)	30 (114)	8.6 (26)	12				5500	81.7	68.3
109	95 (27.7)	40 (152)	8.1 (24)	16				5300	81.7	68.3
112	104 (30.3)	40 (152)	10.1 (30)	16				5100	81.7	68.3
139	119 (34.8)	40 (152)	7.1 (21)	16	2			11400	85.9	71.8
174	153 (44.5)	40 (152)	10.5 (31)	16				11100	85.9	71.8
197	175 (51.0)	40 (152)	13.9 (42)	16				10500	85.9	71.8
225	204 (59.4)	65 (246)	10.9 (33)	26				10100	85.9	71.8
260	230 (67.1)	60 (227)	10.1 (30)	24	3			16600	89.4	73.7
310	274 (80.0)	80 (303)	9.8 (29)	32				15800	89.4	73.7
350	312 (91.0)	80 (303)	14.6 (44)	32				14500	89.4	73.7
352	290 (84.5)	60 (227)	12.9 (39)	24	4			20700	91.0	75.7
419	347 (101)	80 (303)	12.7 (38)	32				19700	91.0	75.7
466	389 (114)	100 (379)	12.7 (38)	40				19000	91.0	75.7
491	416 (121)	120 (455)	12.8 (38)	48				18100	91.0	75.7
620	549 (160)	160 (606)	9.8 (29)	64	6			31600	92.4	76.7
650	577 (168)	130 (493)	15.2 (45)	52				30400	92.4	76.7
700	624 (182)	160 (606)	14.6 (44)	64				2900	92.4	76.7
790	697 (203)	160 (606)	12.7 (38)	64	8			39400	94.0	78.7
880	781 (228)	200 (758)	12.7 (38)	80				37900	94.0	78.7
940	830 (242)	240 (910)	12.5 (37)	96				36200	94.0	78.7
Liebert Quiet-Line™ Models										

Table 5.2 Drycooler performance data, 50Hz (continued)

Model Number *D**	Standard Circuits Data				Fans Direct Drive					
	Total Heat Rejection, kBtuh (kW) @ 25F ITD	Glycol Flow Rate, GPM (lpm)	Pressure Drop, Ft. H_2O (kPa)	No. of Internal Circuits (Std.)	No. of Fans	Blade Diameter, in (cm)	Rated Motor hp	Air Flow (CFM)	Sound Power, LwA	Sound Pressure, dBA**
040	19 (5.6)	20 (76)	8.8 (26)	8	1	26 (66)	1/4	2600	65.6	53.2
057	45 (13.2)	30 (114)	8.6 (26)	12				2500	65.6	53.2
060	52 (15.3)	40 (152)	8.1 (24)	16				2400	65.6	53.2
080	65 (19.2)	40 (152)	7.0 (21)	16	2			5200	69.3	56.2
111	84 (24.7)	40 (152)	10.4 (31)	16				5000	69.3	56.2
121	96 (28.2)	40 (152)	13.7 (41)	16				4700	69.3	56.2
158	127 (37.1)	60 (227)	10.0 (30)	24	3			7500	71.5	58.0
173	151 (44.2)	80 (303)	9.7 (29)	32				7100	71.5	58.0
178	172 (50.3)	80 (303)	14.5 (43)	32				6200	71.5	58.0
205	160 (46.7)	60 (227)	12.9 (39)	24	4			9700	72.9	59.2
248	191 (55.9)	80 (303)	12.5 (37)	32				9500	72.9	59.2
347	302 (88)	160 (606)	9.8 (29)	64	6			14200	75.1	61.0
356	343 (101)	160 (606)	14.6 (44)	64				12400	75.1	61.0
453	383 (112)	160 (606)	12.6 (38)	64	8			18900	76.6	62.2
498	457 (134)	240 (910)	12.4 (37)	96				16500	76.6	62.2

Standard data based on 95 °F (35 °C) EAT, 120 °F (48.9 °C) EFT, 40% E.G.
Capacity shown is drycooler THR at sea level.
Sound Pressure is dBA @ 5ft (1.5m)

6 DIMENSIONS AND WEIGHTS

6.1 Drycooler Dimensions and Anchor Plans

Table 6.1 Standard Drycooler dry weights, shipping weights, dimensions and volume, approximate

Model	No. of Fans	Dry Weight lb (kg)	Domestic Packed				Export Packed			
			Weight	Dimension (LxWxH)		Volume	Weight	Dimension (LxWxH)		Volume
			lb. (kg)	in.	(cm)	ft^3 (m^3)	lb. (kg.)	in.	(cm)	ft^3 (m^3)
*D**033	1	355 (161)	510 (231)	62x36x63	(157x91x160)	81 (2.3)	617 (280)	63x37x64	(160x94x163)	86 (2.5)
*D**069		375 (170)	530 (240)				637 (289)			
*D**092		395 (179)	550 (249)				657 (298)			
*D**109		415 (188)	570 (259)				677 (307)			
*D**112		435 (197)	590 (268)				697 (316)			
*D**139	2	500 (227)	757 (343)	102x36x63	(259x91x160)	134 (3.8)	914 (415)	103x37x64	(262x94x163)	141 (4.0)
*D**174		540 (245)	797 (362)				954 (433)			
*D**197		580 (263)	837 (380)				994 (451)			
*D**225		620 (281)	877 (398)				1034 (469)			
*D**260	3	735 (333)	1104 (501)	142x36x63	(361x91x160)	186 (5.3)	1282 (582)	143x37x64	(363x94x163)	196 (5.6)
*D**310		795 (361)	1164 (528)				1342 (609)			
*D**350		855 (388)	1224 (555)				1402 (636)			
*D**352	4	940 (426)	1401 (635)	182x36x63	(462x91x160)	239 (6.7)	1658 (752)	183x37x64	(465x94x163)	251 (7.0)
*D**419		1020 (463)	1481 (672)				1738 (788)			
*D**466		1050 (476)	1511 (685)				1768 (802)			
*D**491		1100 (499)	1561 (708)				1818 (825)			

Table 6.1 Standard Drycooler dry weights, shipping weights, dimensions and volume, approximate (continued)

Model	No. of Fans	Dry Weight lb (kg)	Domestic Packed				Export Packed			
			Weight	Dimension (LxWxH)		Volume	Weight	Dimension (LxWxH)		Volume
			lb. (kg)	in.	(cm)	ft^3 (m^3)	lb. (kg.)	in.	(cm)	ft^3 (m^3)
*D**620	6	1780 (808)	2223 (1008)	142x36x94	(361x91x239)	278 (7.9)	2948 (1337)	143x37x95	(363x94x241)	291 (8.2)
*D**650		1830 (831)	2273 (1031)				2998 (1360)			
*D**700		1880 (854)	2323 (1054)				3048 (1383)			
*D**790	8	2250 (1022)	2815 (1277)	182x36x94	(462x91x239)	356 (10.0)	3769 (1710)	183x37x95	(465x94x241)	372 (10.5)
*D**880		2330 (1058)	2895 (1313)				3849 (1746)			
*D**940		2430 (1103)	2995 (1359)				3949 (1791)			

Table 6.2 Quiet-Line Drycooler dry weights, shipping weights, dimensions and volume, approximate

Model	No. of Fans	Dry Weight lb (kg)	Domestic Packed				Export Packed			
			Weight	Dimension (LxWxH)		Volume	Weight	Dimension (LxWxH)		Volume
			lb. (kg)	in.	(cm)	ft^3 (m^3)	lb. (kg.)	in.	(cm)	ft^3 (m^3)
*D**040	1	375 (170)	530 (240)	62x36x63	(157x91x160)	81 (2.3)	637 (289)	63x37x64	(160x94x163)	86 (2.5)
*D**057		395 (179)	550 (249)				657 (298)			
*D**060		415 (188)	570 (259)				677 (307)			
*D**080	2	500 (227)	757 (343)	102x36x63	(259x91x160)	134 (3.8)	914 (415)	103x37x64	(262x94x163)	141 (4.0)
*D**111		540 (245)	797 (362)				954 (433)			
*D**121		580 (263)	837 (380)				994 (451)			

Table 6.2 Quiet-Line Drycooler dry weights, shipping weights, dimensions and volume, approximate (continued)

Model	No. of Fans	Dry Weight lb (kg)	Domestic Packed				Export Packed			
			Weight	Dimension (LxWxH)		Volume	Weight	Dimension (LxWxH)		Volume
			lb. (kg)	in.	(cm)	ft^3 (m^3)	lb. (kg.)	in.	(cm)	ft^3 (m^3)
*D**158	3	735 (333)	1104 (501)	142x36x63	(361x91x160)	186 (5.3)	1282 (582)	143x37x64	(363x94x163)	196 (5.6)
*D**173		795 (361)	1164 (528)				1342 (609)			
*D**178		855 (388)	1224 (555)				1402 (636)			
*D**205	4	940 (426)	1401 (635)	182x36x63	(462x91x160)	239 (6.7)	1658 (752)	183x37x64	(465x94x163)	251 (7.0)
*D**248		1020 (463)	1481 (672)				1738 (788)			
*D**347	6	1780 (808)	2223 (1008)	142x36x94	(361x91x239)	278 (7.9)	2948 (1337)	143x37x95	(363x94x241)	291 (8.2)
*D**356		1880 (854))	2323 (1054)				3048 (1383)			
*D**453	8	2250 (1022)	2815 (1277)	182x36x94	(462x91x239)	356 (10.0)	3769 (1710)	183x37x95	(465x94x241)	372 (10.5)
*D**498		2430 (1103)	2995 (1359)				3949 (1791)			

Figure 6.1 Drycooler planning dimensional data—One- and two-fan units

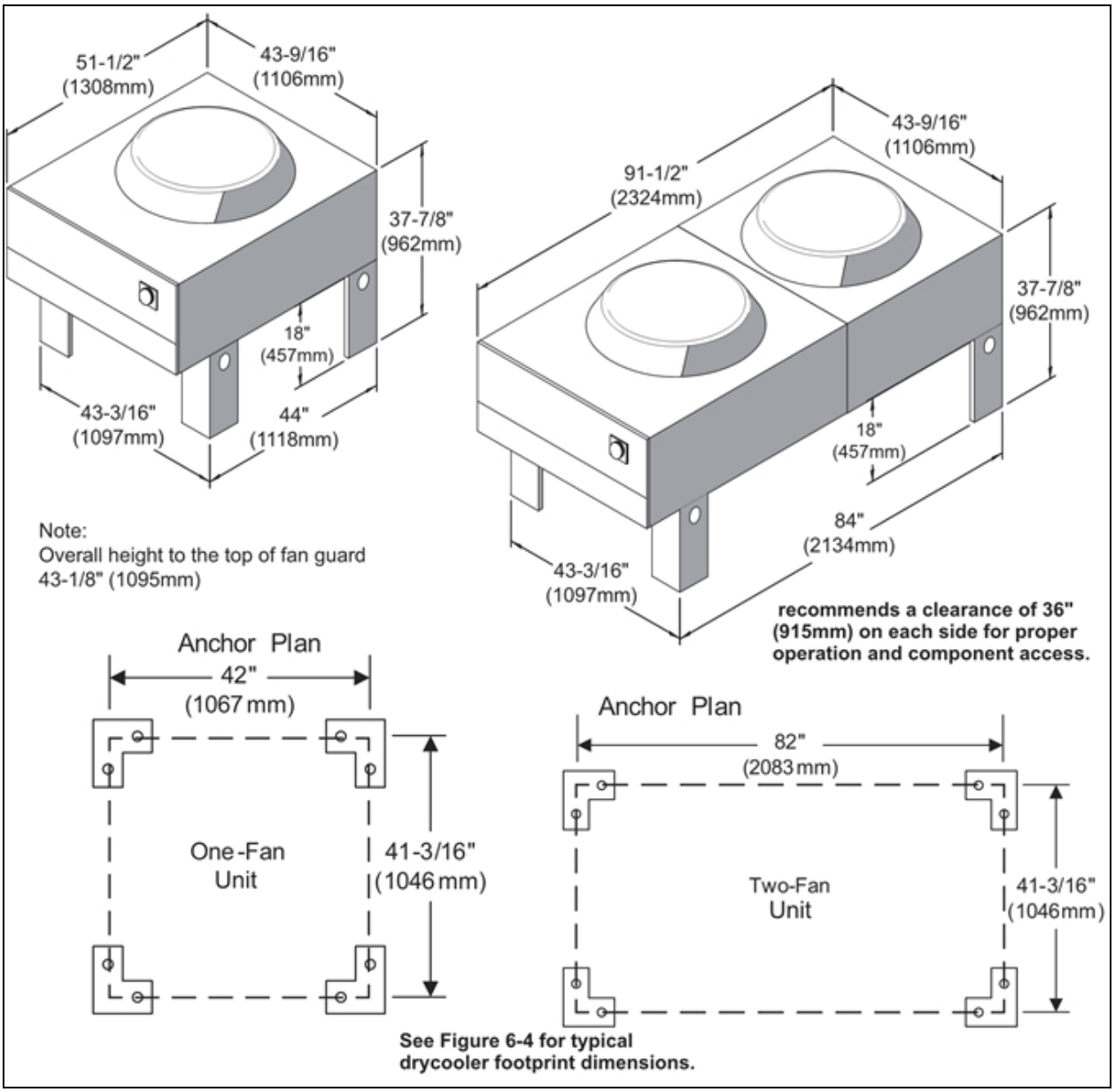

Figure 6.2 Drycooler planning dimensional data—Three- and four-fan units

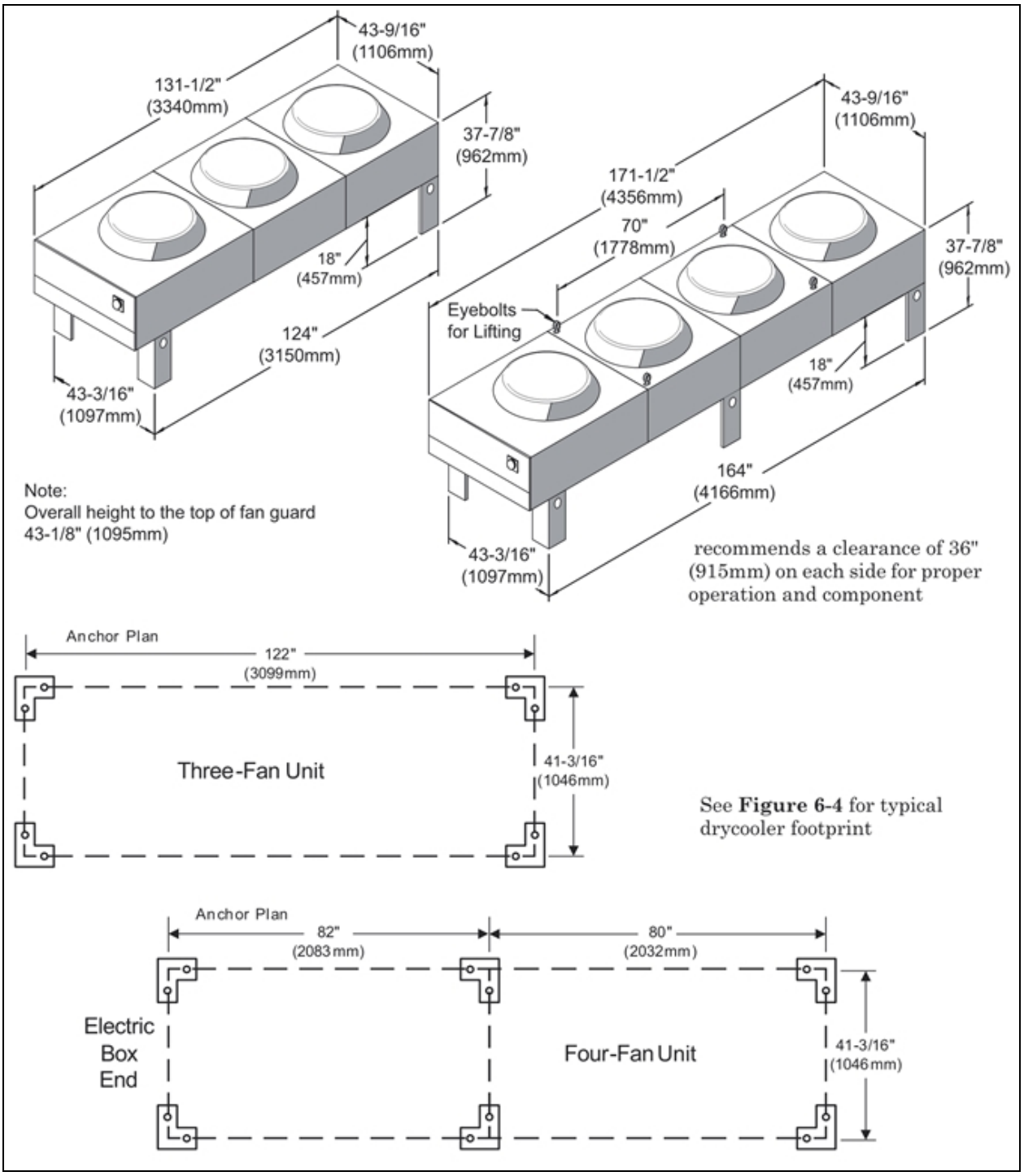

Figure 6.3 Drycooler planning dimensional data—Six- and eight-fan units

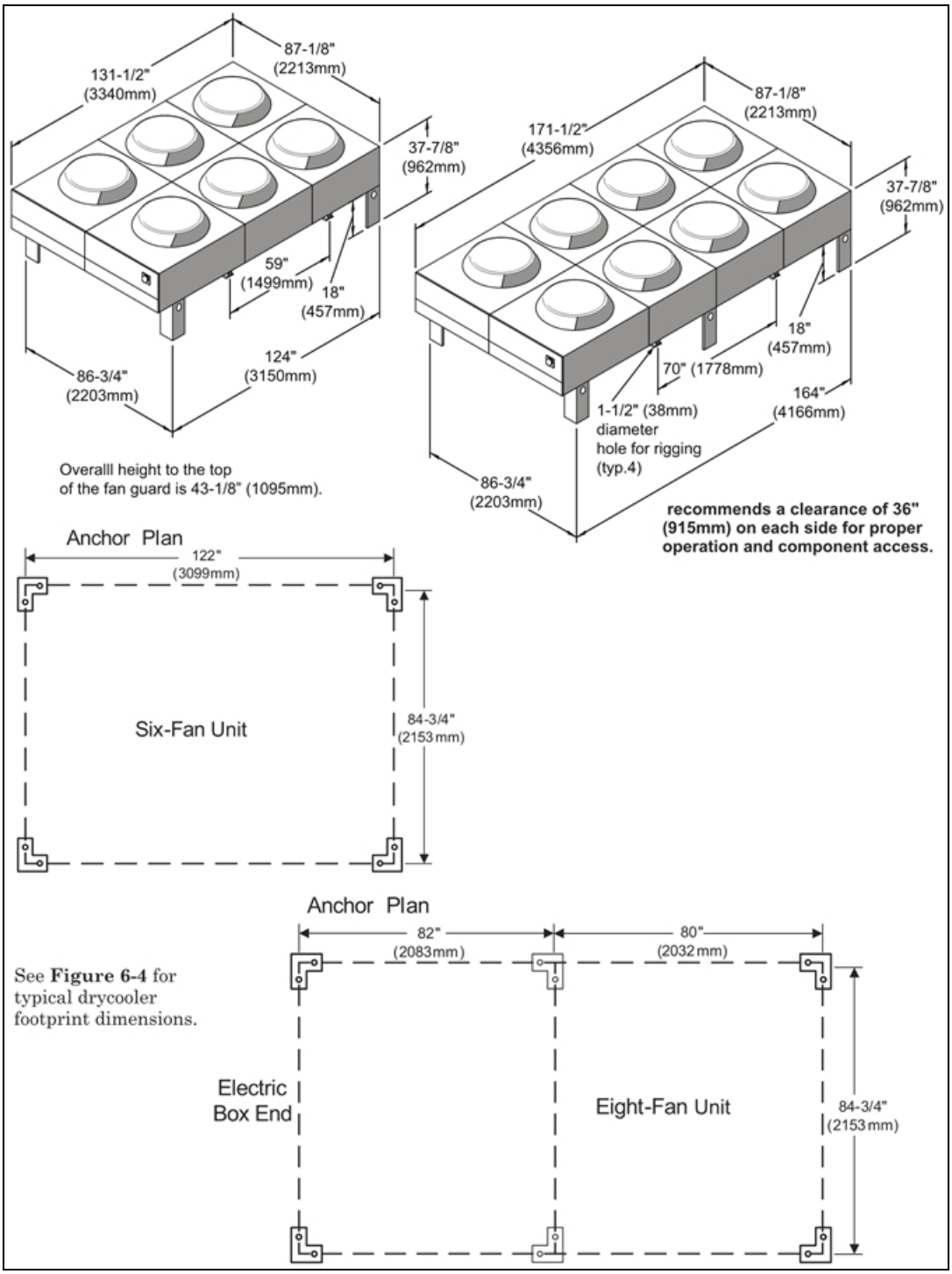

Figure 6.4 Typical drycooler footprint—dimensions

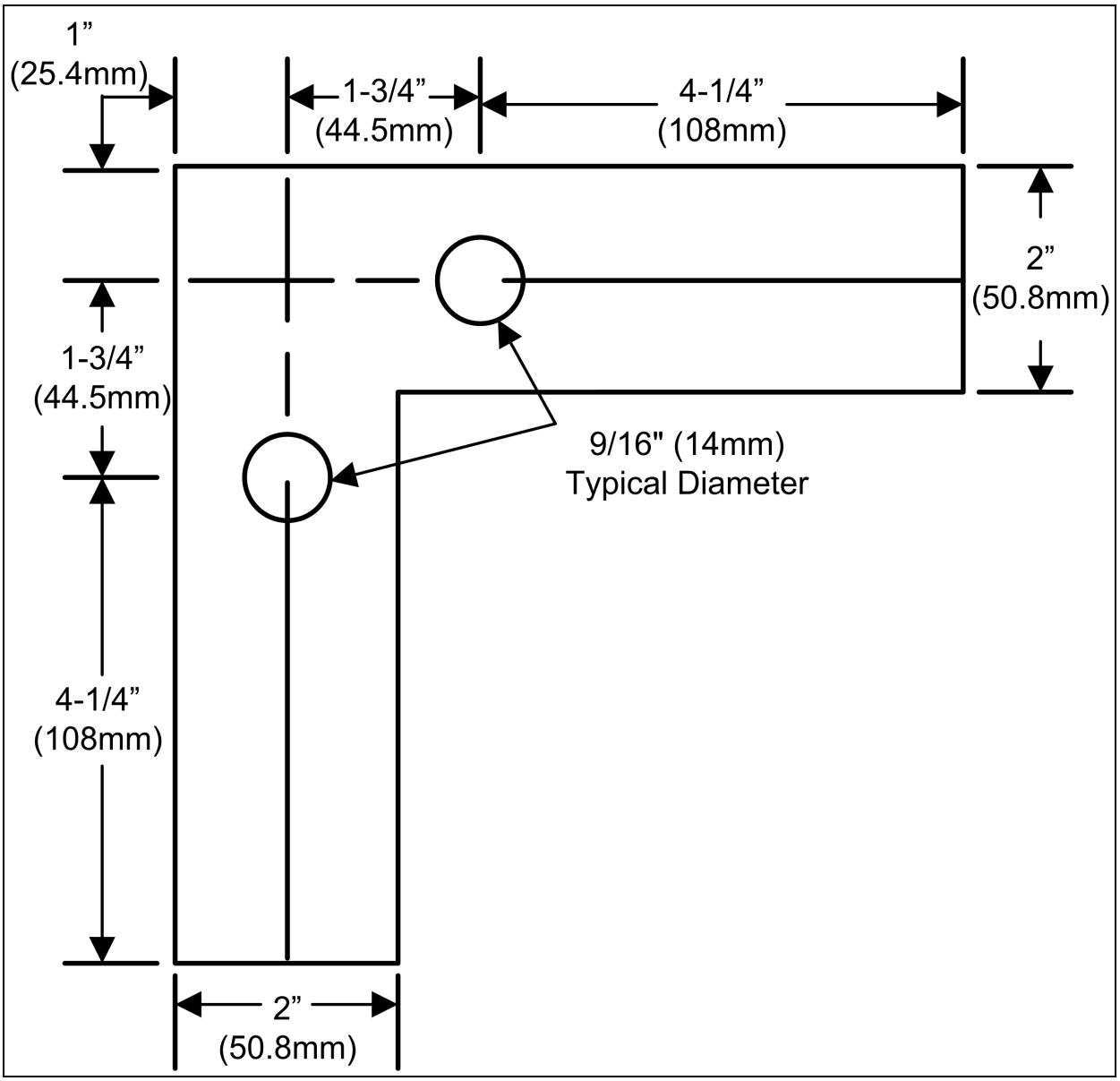

This page intentionally left blank.

7 PIPING

7.1 Piping Considerations

NOTICE

Risk of freezing temperatures and broken pipes. Can cause building and equipment damage.

When using water under pressure to test the system for leaks, immediately charge the tested system with glycol. Complete system drain-down cannot be assured.

Vertiv recommends testing instead with common refrigerant gas pressurized with nitrogen and using a refrigerant-type leak detector to check for leaks.

Galvanized pipe or other components should not be used with an inhibited glycol system.

All fluid piping must comply with local codes. Care in sizing pipes will help reduce pumping power and operating costs.

Manual shutoff valves and unions should be installed at the supply and return line of each major system component. This permits routine service or emergency isolation of the component.

Where connecting to a city water supply, provide a disconnection means. A city water source is desirable for initially charging the system and as an emergency standby cooling source.

The minimum glycol temperature to be supplied from the drycooler determines whether the supply and return lines should be insulated to prevent condensation (see Table 10.1 on page 60).

Vents are required at system high points to vent trapped air when filling the system.

Since the system is not open to the atmosphere, an expansion tank must be provided for expansion and contraction of the fluid with temperature change. A relief valve is also necessary.

A fill port is necessary for charging the system with glycol.

Depending on the complexity of the system, various other devices may be specified, such as pressure gages, valves, pumps and sensors.

7.2 Glycol/Inhibitor Solution

The percentage of glycol to water will be determined by the outdoor ambient in which the system is operating. Just as critical is the inhibitor used with the glycol.

Commercial ethylene glycol (Union Carbide Ucartherm, Dow Chemical Dowtherm SR-1, and Texaco E.G. Heat Transfer Fluid 100), when pure, is generally less corrosive to the metals than water. It will, however, assume the corrosivity of the water from which it is prepared and may become increasingly corrosive with use if not properly inhibited. Proper inhibitor maintenance must be performed to prevent corrosion of the glycol system. Consult glycol manufacturer for testing and maintenance of inhibitors.

Automotive antifreeze is unacceptable and must not be used in any glycol fluid system.

There are two basic concepts of corrosion inhibition: They are classified as corrosion inhibitors or environmental stabilizers. The corrosion inhibitors function by forming a surface barrier that protects the metals. Environmental stabilizers decrease corrosion by stabilizing or favorably altering the overall environment. An alkaline buffer, such as borax, is a simple example, since its prime purpose is to maintain an alkaline condition (ph above 7).

The quality of the water of dilution must be considered because water may contain corrosive elements which reduce the effectiveness of the inhibited formulation. Surface waters that are classified as soft and are low in chloride and sulfate ion content (less than 100 ppm each) should be employed.

7.3 Piping Connections

Figure 7.1 Piping connection locations for 1-, 2-, 3- and 4-fan drycoolers

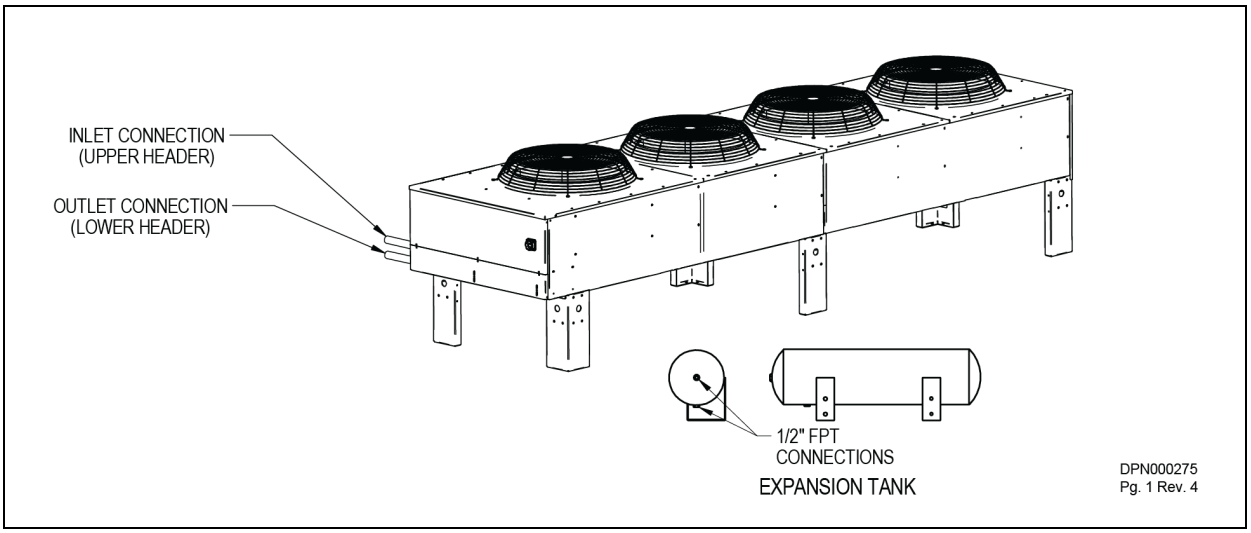

Table 7.1 Piping Connection Sizes (O.D. Cu)

Model No.	No. of Coil Circuits	Inlet and Outlet Pipe Diameter, in.
-033	4*	1-3/8
-069	4, 8*	1-3/8
-092	6, 12*, 16	1-5/8
-109	8	1-3/8
-109	16*	2-1/8
-112	8	1-3/8
-112	16*, 26	2-1/8
-139	8, 16*	2-1/8
-174	8, 16*, 24	2-1/8
-197	8	1-3/8
-197	16*, 32	2-1/8
-225	16, 26*	2-1/8
-260	16, 24*	2-1/8
-310	16, 32*	2-1/8

Table 7.1 Piping Connection Sizes (O.D. Cu) (continued)

Model No.	No. of Coil Circuits	Inlet and Outlet Pipe Diameter, in.
-350	16, 32*	2-1/8
-350	48	2-5/8
-352	16, 24*	2-1/8
-419	16, 32*	2-1/8
-466	26	2-1/8
-466	40*	2-5/8
-491	16, 32	2-1/8
-491	48*	2-5/8
* = Standard Circuiting		

Figure 7.2 Piping connection locations for 6 and 8 fan drycoolers

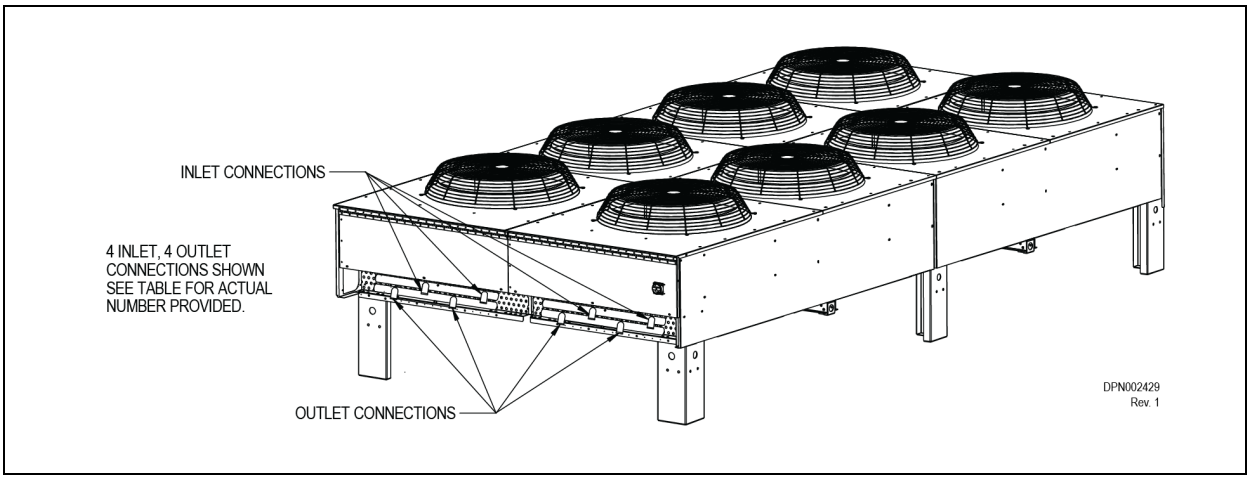

Model No.	No. of Fans	No. of Internal Circuits	No. of Inlets and Outlets	Inlet and Outlet Connection sizes (IDS, Cu), in.
-620	6	32	2	2-1/8
		64*		
-650		40		
		52*		
		80	4	
-700		32	2	
		64*		
		96	4	
-790	8	32	2	
		64*		
-880		52		
		80*	4	
-940		32	2	
		64		
		96*	4	

* = Standard Circuiting

Table 7.2 Volume in standard tube

Type "L" copper tube			
Diameter (in.)		Volume	
Outside	Inside	Gal/ft	
.50	0.430	0.0075	(0.09)
.625	0.545	0.0121	(0.15)
.75	0.666	0.0181	(0.22)
.875	0.785	0.0251	(0.31)
1.125	1.025	0.0429	(0.53)
1.375	1.265	0.0653	(0.81)
1.625	1.505	0.0924	(1.15)
2.125	1.985	0.161	(2.00)
2.625	2.465	0.248	(3.08)
3.125	2.945	0.354	(4.40)
3.625	3.425	0.479	(5.95)
4.125	3.905	0.622	(7.73)

This page intentionally left blank.

8 PUMP PACKAGES AND EXPANSION TANK—ANCILLARY ITEMS

Table 8.1 Pump piping and electrical data

HP	Connections		Hz	Electrical Data				
				FLA				
	Pump Suct. Conn., in.	Pump Disc. Conn., in.		PH	208 Volts	230 Volts	460 Volts	575 Volts
3/4	1-1/4	3/4	60	1	7.6	6.9	—	—
3/4				3	3.5	3.2	1.6	1.3
1-1/2					6.6	6.0	3.0	2.4
2					7.5	6.8	3.4	2.7
3	1-1/2	1			10.6	9.6	4.8	3.9
5		1-1/4			16.7	15.2	7.6	6.1
7-1/2	3	3			24.2	22.0	11.0	9.0
					200 Volts	220 Volts	380/415 Volts	
1	1-1/4	3/4	50	3	3.26	3.24	1.64 / 1.63	
1-1/2					4.51	4.47	2.4 / 2.25	
2					5.77	5.71	3.00 / 2.88	
3	1-1/2	1-1/4			8.76	8.67	4.7 / 4.38	
5		1			14.94	14.5	7.9 / 7.47	

Figure 8.1 Pump curve, 60 Hz

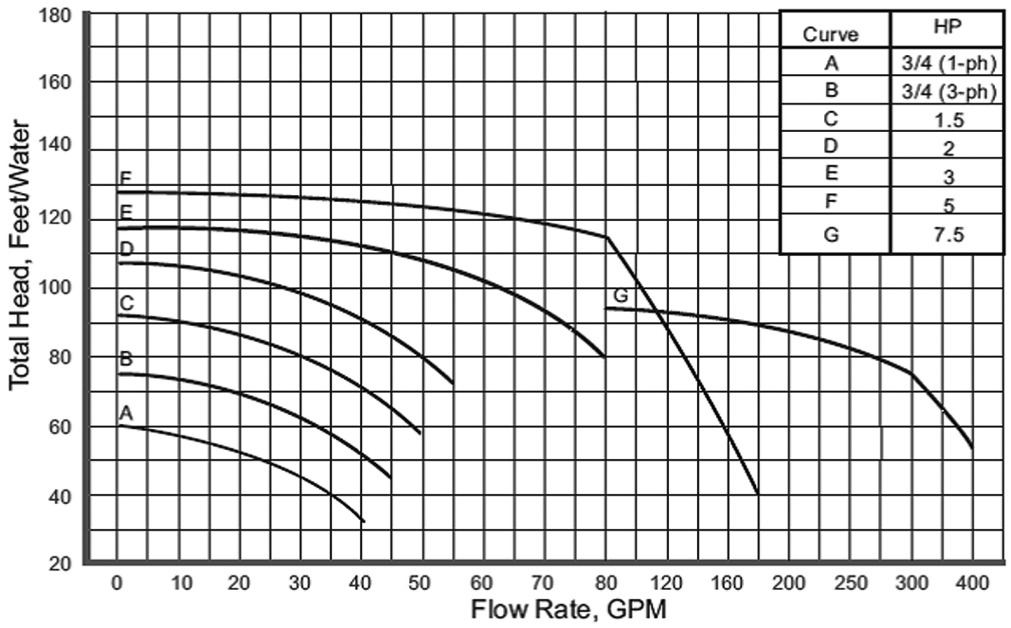

Figure 8.2 Single-pump package and mounting

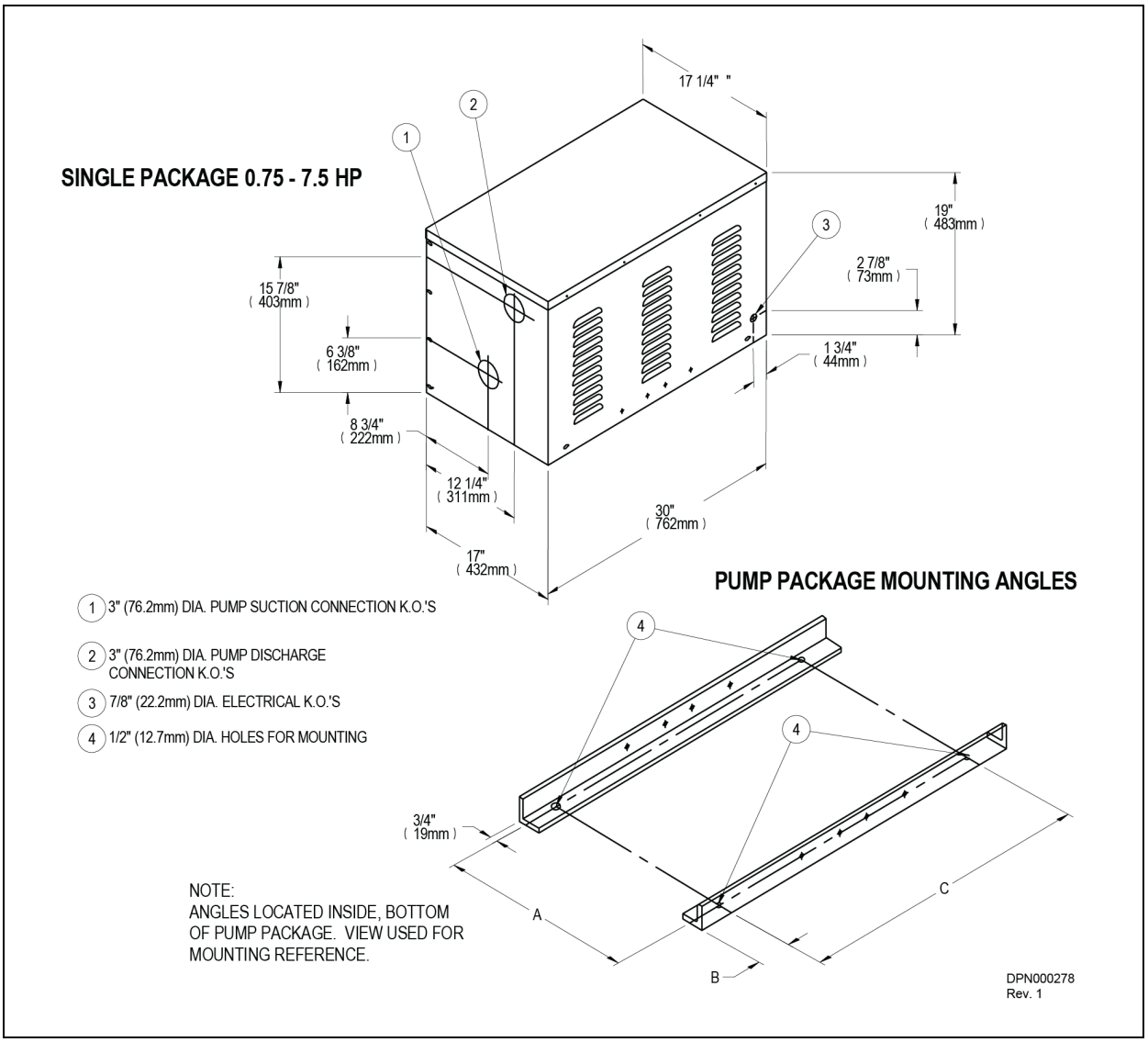

Mounting-hole Dimensional Data, in. (mm)			
Pump package	A	B	C
Single (0.75 – 7.5 HP)	15-1/4 (387)	2-1/2 (64)	22-1/2 (572)

Figure 8.3 Dual-pump package and mounting

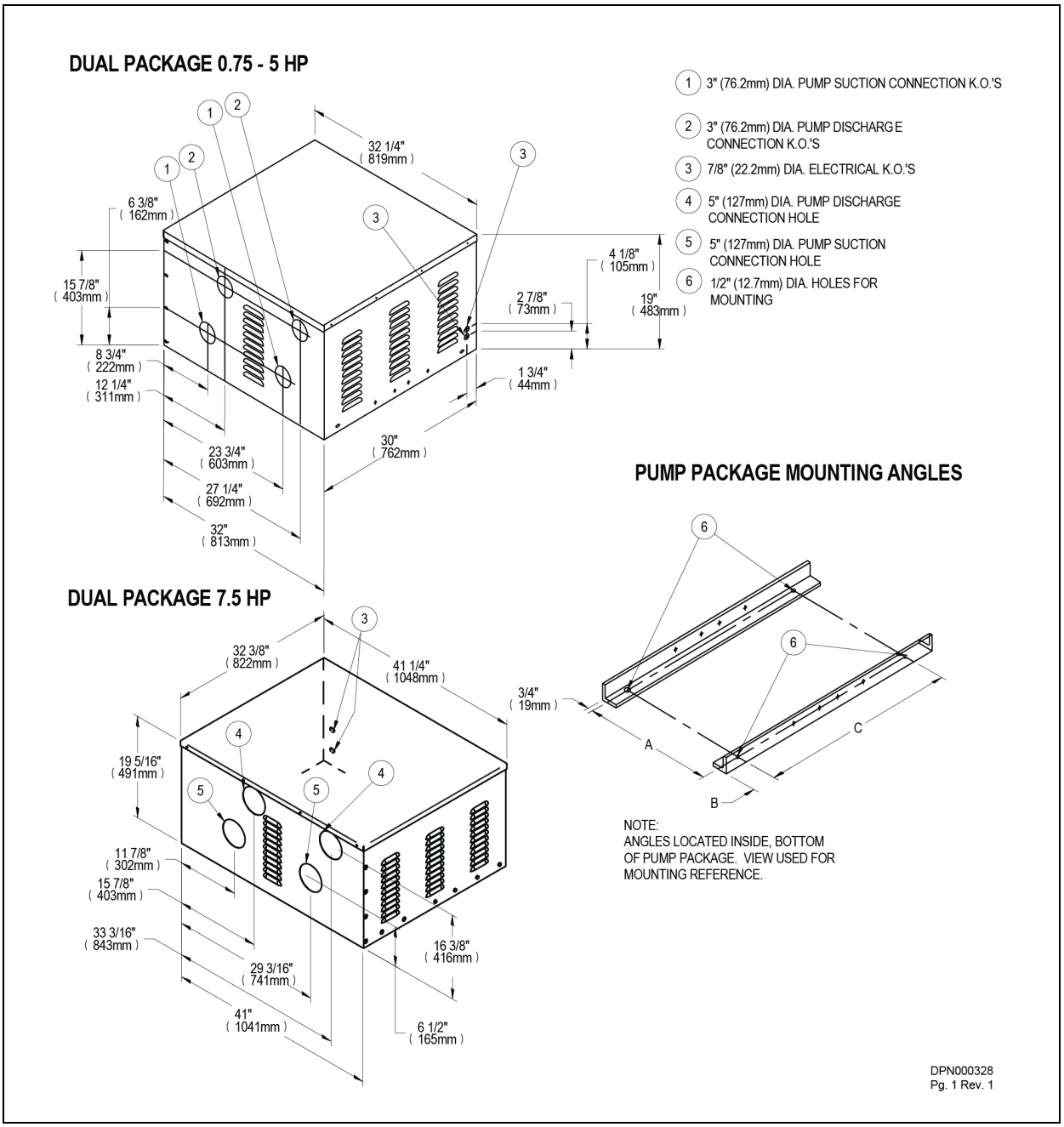

Mounting-hole Dimensional Data, in. (mm)			
Pump package	A	B	C
Dual (0.75 – 5.0 HP)	30-1/4 (768)	2-1/2 (64)	22-1/2 (572)
Dual (7.5 HP)	39-5/16 (999)	1-3/4 (45)	26-7/8 (683)

Expansion Tank

This tank, included in a standard pump package, has an internal volume of 8.8 gal. (33 l) and a maximum pressure of 100 psi (690 kPa).

This tank is sized for a typical “open” system with a fluid volume of less than 75 gal. (280l). When used in a “closed” system, volumes of up to 140 gal. (530 l) can be accommodated. The use of a safety relief valve, field supplied, is recommended for systems “closed” to atmospheric venting. Other piping accessories for filling, venting, or adjusting the fluid in the system, are recommended, but not included.

Figure 8.4 Expansion tank

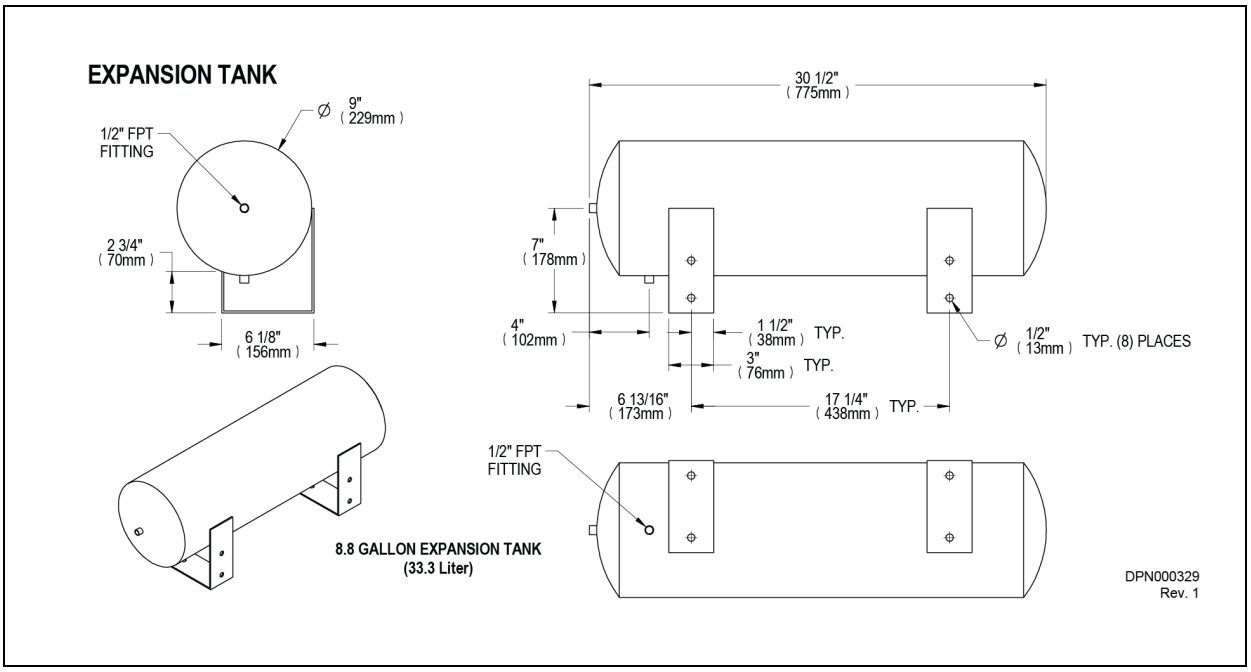

This page intentionally left blank.

9 ELECTRICAL DATA

Electrical service is required for all drycoolers at the location of the outdoor system. The power supply does not necessarily have to be the same voltage supply that is required by the indoor unit. The only electrical connection between the indoor unit and the drycooler is a two-wire control interlock, which is field-provided and field-connected.

Table 9.1 below, Table 9.2 on the next page and Table 9.3 on page 47 provide electrical requirements for drycoolers and pumps powered from separate power supplies. Table 9.4 on page 48 and Table 9.5 on page 49 provide single electrical-supply requirements of drycoolers using integral pump controls.

9.1 Line Voltage Electrical Data

Table 9.1 60Hz electrical values—Drycoolers without pump controls

# of Fans		Voltage	Phase	FLA	WSA	OPD
Standard Models						
1	33, 69, 92, 109, 112	208/230	1	4.8	6.0	15
			3	3.5	4.4	15
		460	3	1.7	2.1	15
		575	3	1.4	1.8	15
2	139, 174, 197, 225	208/230	3	7.0	7.9	15
		460	3	3.4	3.8	15
		575	3	2.8	3.2	15
3	260, 310, 350	208/230	3	10.5	11.4	15
		460	3	5.1	5.5	15
		575	3	4.2	4.6	15
4	352, 419, 466, 491	208/230	3	14.0	14.9	20
		460	3	6.8	7.2	15
		575	3	5.6	6.0	15
6	620, 650, 700	208/230	3	21.0	21.9	25
		460	3	10.2	10.6	15
		575	3	8.4	8.8	15
8	790, 880, 940	208/230	3	28.0	28.9	35
		460	3	13.6	14.0	20
		575	3	11.2	11.6	15
Liebert Quiet-Line Models						
1	40, 57, 60	208/230	3	1.8	2.3	15
		460	3	0.9	1.1	15
		575	3	0.7	0.9	15
2	80, 111, 121	208/230	3	3.6	4.1	15
		460	3	1.8	2.0	15
		575	3	1.4	1.6	15

Table 9.1 60Hz electrical values—Drycoolers without pump controls (continued)

# of Fans		Voltage	Phase	FLA	WSA	OPD
3	158, 173, 178	208/230	3	5.4	5.9	15
		460	3	2.7	2.9	15
		575	3	2.1	2.3	15
4	205, 248	208/230	3	7.2	7.7	15
		460	3	3.6	3.8	15
		575	3	2.8	3.0	15
6	347, 356	208/230	3	10.8	11.3	15
		460	3	5.4	5.6	15
		575	3	4.2	4.4	15
8	453, 498	208/230	3	14.4	14.9	20
		460	3	7.2	7.4	15
		575	3	5.6	5.8	15
Values are calculated per UL 1995. OPD values may be adjusted higher than calculations to compensate for maximum anticipated application temperatures.						

Table 9.2 50 Hz electrical values—Drycoolers without pump controls

# of Fans	Model #	Voltage	Phase	FLA
Standard Models				
1	33, 69, 92, 109, 112	200/230	1	4.0
		380/415	3	1.7
2	139, 174, 197, 225	380/415	3	3.4
3	260, 310, 350	380/415	3	5.1
4	352, 419, 466, 491	380/415	3	6.8
6	620, 650, 700	380/415	3	10.2
8	790, 880, 940	380/415	3	13.6
Quiet-Line Model				
1	40, 57, 60	380/415	3	0.9
2	80, 111, 121	380/415	3	1.8
3	158, 173, 178	380/415	3	2.7
4	205, 248	380/415	3	3.6
6	347, 356	380/415	3	5.4
8	453, 498	380/415	3	7.2

Table 9.3 60Hz pump FLA values

Pump hp	Input Power, Volts		
	208/230	460	575
3/4	3.5	1.6	1.3
1	4.6	2.1	1.7
1.5	6.6	3.0	2.4
2	7.5	3.4	2.7
3	10.6	4.8	3.9
5	16.7	7.6	6.1
7.5	24.2	11.0	9.0
10	30.8	14.0	11.0
15	46.2	21.0	17.0
Values based on NEC handbook values for 3-phase motors.			

Table 9.4 60Hz Electrical values—Standard drycoolers with integral pump controls

# of Fans	1				2				3				4				6				8			
Model #	33,69,92,109,112				139,174,197,225				260,310,350				352,419,466,491				620,650,700				790,880,940			
Pump hp	Ph	FL A	WS A	OP D	Ph	FL A	WS A	OP D	Ph	FL A	WS A	OP D	Ph	FL A	WS A	OP D	Ph	FL A	WS A	OP D	Ph	FL A	WS A	OP D
208/230/60																								
0.75	1	12.4	14.3	20	—	—	—	—	—	—	—	—	—	—	—	—	—	—	—	—	—	—	—	—
0.75	3	7.0	7.9	15	3	10.5	11.4	15	3	14.0	14.9	20	3	17.5	18.4	25	3	24.5	25.4	30	3	31.5	32.4	40
1.5	3	10.1	11.8	15	3	13.6	15.3	20	3	17.1	18.8	25	3	20.6	22.3	25	3	27.6	29.3	35	3	34.6	36.3	40
2.0	3	11.0	12.9	20	3	14.5	16.4	20	3	18.0	19.9	25	3	21.5	23.4	30	3	28.5	30.4	35	3	35.5	37.4	45
3.0	3	14.1	16.8	25	3	17.6	20.3	30	3	21.1	23.8	30	3	24.6	27.3	35	3	31.6	34.3	40	3	38.6	41.3	50
5.0	3	20.2	24.4	40	3	23.7	27.9	40	3	27.2	31.4	45	3	30.7	34.9	50	3	37.7	41.9	50	3	44.7	48.9	60
7.5 *	3	27.7	33.8	50	3	31.2	37.3	60	3	34.7	40.8	60	3	38.2	44.3	60	3	45.2	51.3	70	3	52.2	58.3	80
10.0 *	3	34.3	42.0	70	3	37.8	45.5	70	3	41.3	49.0	70	3	44.8	52.5	80	3	51.8	59.5	90	3	58.8	66.5	90
15 *	3	49.7	61.3	100	3	53.2	64.8	110	3	56.7	68.3	110	3	60.2	71.8	110	3	67.2	78.8	110	3	74.2	85.8	125
460/60																								
0.75	3	3.3	3.7	15	3	5.0	5.4	15	3	6.7	7.1	15	3	8.4	8.8	15	3	11.8	12.2	15	3	15.2	15.6	20
1.5	3	4.7	5.5	15	3	6.4	7.2	15	3	8.1	8.9	15	3	9.8	10.6	15	3	13.2	14.0	20	3	16.6	17.4	20
2.0	3	5.1	6.0	15	3	6.8	7.7	15	3	8.5	9.4	15	3	10.2	11.1	15	3	13.6	14.5	20	3	17.0	17.9	20
3.0	3	6.5	7.7	15	3	8.2	9.4	15	3	9.9	11.1	15	3	11.6	12.8	15	3	15.0	16.2	20	3	18.4	19.6	25
5.0	3	9.3	11.2	15	3	11.0	12.9	20	3	12.7	14.6	20	3	14.4	16.3	20	3	17.8	19.7	25	3	21.2	23.1	30
7.5	3	12.7	15.5	25	3	14.4	17.2	25	3	16.1	18.9	25	3	17.8	20.6	30	3	21.2	24.0	30	3	24.6	27.4	35
10.0	3	15.7	19.2	30	3	17.4	20.9	30	3	19.1	22.6	35	3	20.8	24.3	35	3	24.2	27.7	40	3	27.6	31.1	45
15 *	3	22.7	28.0	45	3	24.4	29.7	50	3	26.1	31.4	50	3	27.8	33.1	50	3	31.2	36.5	50	3	34.6	39.9	60
575/60																								
0.75	3	2.7	3.1	15	3	4.1	4.5	15	3	5.5	5.9	15	3	6.9	7.3	15	3	9.7	10.1	15	3	12.5	12.9	15
1.5	3	3.8	4.4	15	3	5.2	5.8	15	3	6.6	7.2	15	3	8.0	8.6	15	3	10.8	11.4	15	3	13.6	14.2	20
2.0	3	4.1	4.8	15	3	5.5	6.2	15	3	6.9	7.6	15	3	8.3	9.0	15	3	11.1	11.8	15	3	13.9	14.6	20
3.0	3	5.3	6.3	15	3	6.7	7.7	15	3	8.1	9.1	15	3	9.5	10.5	15	3	12.3	13.3	15	3	15.1	16.1	20

Table 9.4 60Hz Electrical values—Standard drycoolers with integral pump controls (continued)

# of Fans	1				2				3				4				6				8			
Model #	33,69,92,109,112				139,174,197,225				260,310,350				352,419,466,491				620,650,700				790,880,940			
Pump hp	Ph	FLA	WSA	OPD	Ph	FLA	WSA	OPD	Ph	FLA	WSA	OPD	Ph	FLA	WSA	OPD	Ph	FLA	WSA	OPD	Ph	FLA	WSA	OPD
5.0	3	7.5	9.0	15	3	8.9	10.4	15	3	10.3	11.8	15	3	11.7	13.2	15	3	14.5	16.0	20	3	17.3	18.8	20
7.5	3	10.4	12.7	20	3	11.8	14.1	20	3	13.2	15.5	20	3	14.6	16.9	25	3	17.4	19.7	25	3	20.2	22.5	30
10.0	3	12.4	15.2	25	3	13.8	16.6	25	3	15.2	18.0	25	3	16.6	19.4	30	3	19.4	22.2	30	3	22.2	25.0	35
15	3	18.4	22.7	35	3	19.8	24.1	40	3	21.2	25.5	40	3	22.6	26.9	40	3	25.4	29.7	45	3	28.2	32.5	45

Values are calculated per UL 1995. Pump FLA values used are based on NEC tables for motor horsepower. OPD values may be adjusted higher than calculations to compensate for maximum anticipated application temperatures.

* May require electrical component(s) with higher capacity in the drycooler. Consult factory representatives for assistance before ordering.

Table 9.5 60 Hz Electrical values - Quiet-Line drycoolers with integral pump controls

# of Fans	1				2				3				4				6				8			
Model #	40,57,60				80,111,121				158,173,178				205,248				347,356				453,498			
Pump hp	Ph	FLA	WSA	OPD	Ph	FLA	WSA	OPD	Ph	FLA	WSA	OPD	Ph	FLA	WSA	OPD	Ph	FLA	WSA	OPD	Ph	FLA	WSA	OPD
208/230/3/60																								
0.75	3	5.3	6.2	15	3	7.1	8.0	15	3	8.9	9.8	15	3	10.7	11.6	15	3	14.3	15.2	20	3	17.9	18.8	25
1.5	3	8.4	10.1	15	3	10.2	11.9	15	3	12.0	13.7	20	3	13.8	15.5	20	3	17.4	19.1	25	3	21.0	22.7	25
2.0	3	9.3	11.2	15	3	11.1	13.0	20	3	12.9	14.8	20	3	14.7	16.6	20	3	18.3	20.2	25	3	21.9	23.8	30
3.0	3	12.4	15.1	25	3	14.2	16.9	25	3	16.0	18.7	25	3	17.8	20.5	30	3	21.4	24.1	30	3	25.0	27.7	35
5.0	3	18.5	22.7	35	3	20.3	24.5	40	3	22.1	26.3	40	3	23.9	28.1	40	3	27.5	31.7	45	3	31.1	35.3	50
7.5 *	3	26.0	32.1	50	3	27.8	33.9	50	3	29.6	35.7	50	3	31.4	37.5	60	3	35.0	41.1	60	3	38.6	44.7	60

Table 9.5 60 Hz Electrical values - Quiet-Line drycoolers with integral pump controls (continued)

# of Fans	1				2				3				4				6				8			
Model #	40,57,60				80,111,121				158,173,178				205,248				347,356				453,498			
Pump hp	Ph	FLA	WSA	OPD	Ph	FLA	WSA	OPD	Ph	FLA	WSA	OPD	Ph	FLA	WSA	OPD	Ph	FLA	WSA	OPD	Ph	FLA	WSA	OPD
10.0 *	3	32.6	40.3	70	3	34.4	42.1	70	3	36.2	43.9	70	3	38.0	45.7	70	3	41.6	49.3	80	3	45.2	52.9	80
15 *	3	48.0	59.6	100	3	49.8	61.4	100	3	51.6	63.2	100	3	53.4	65.0	110	3	57.0	68.6	110	3	60.6	72.2	110
460/3/60																								
0.75	3	2.5	2.9	15	3	3.4	3.8	15	3	4.3	4.7	15	3	5.2	5.6	15	3	7.0	7.4	15	3	8.8	9.2	15
1.5	3	3.9	4.7	15	3	4.8	5.6	15	3	5.7	6.5	15	3	6.6	7.4	15	3	8.4	9.2	15	3	10.2	11.0	15
2.0	3	4.3	5.2	15	3	5.2	6.1	15	3	6.1	7.0	15	3	7.0	7.9	15	3	8.8	9.7	15	3	10.6	11.5	15
3.0	3	5.7	6.9	15	3	6.6	7.8	15	3	7.5	8.7	15	3	8.4	9.6	15	3	10.2	11.4	15	3	12.0	13.2	15
5.0	3	8.5	10.4	15	3	9.4	11.3	15	3	10.3	12.2	15	3	11.2	13.1	20	3	13.0	14.9	20	3	14.8	16.7	20
7.5	3	11.9	14.7	25	3	12.8	15.6	25	3	13.7	16.5	25	3	14.6	17.4	25	3	16.4	19.2	30	3	18.2	21.0	30
10.0	3	14.9	18.4	30	3	15.8	19.3	30	3	16.7	20.2	30	3	17.6	21.1	35	3	19.4	22.9	35	3	21.2	24.7	35
15 *	3	21.9	27.2	45	3	22.8	28.1	45	3	23.7	29.0	45	3	24.6	29.9	50	3	26.4	31.7	50	3	28.2	33.5	50
575/3/60																								
0.75	3	2.0	2.3	15	3	2.7	3.0	15	3	3.4	3.7	15	3	4.1	4.4	15	3	5.5	5.8	15	3	6.9	7.2	15
1.5	3	3.1	3.7	15	3	3.8	4.4	15	3	4.5	5.1	15	3	5.2	5.8	15	3	6.6	7.2	15	3	8.0	8.6	15
2.0	3	3.4	4.1	15	3	4.1	4.8	15	3	4.8	5.5	15	3	5.5	6.2	15	3	6.9	7.6	15	3	8.3	9.0	15
3.0	3	4.6	5.6	15	3	5.3	6.3	15	3	6.0	7.0	15	3	6.7	7.7	15	3	8.1	9.1	15	3	9.5	10.5	15
5.0	3	6.8	8.3	15	3	7.5	9.0	15	3	8.2	9.7	15	3	8.9	10.4	15	3	10.3	11.8	15	3	11.7	13.2	15
7.5	3	9.7	12.0	20	3	10.4	12.7	20	3	11.1	13.4	20	3	11.8	14.1	20	3	13.2	15.5	20	3	14.6	16.9	25
10.0	3	11.7	14.5	25	3	12.4	15.2	25	3	13.1	15.9	25	3	13.8	16.6	25	3	15.2	18.0	25	3	16.6	19.4	30
15	3	17.7	22.0	35	3	18.4	22.7	35	3	19.1	23.4	40	3	19.8	24.1	40	3	21.2	25.5	40	3	22.6	26.9	40

Values are calculated per UL 1995. Pump FLA values used are based on NEC tables for motor horsepower. OPD values may be adjusted higher than calculations to compensate for maximum anticipated application temperatures.

* May require electrical component(s) with higher capacity in the drycooler. Consult factory representatives for assistance before ordering.

9.2 Low-Voltage Control Wiring

A control interlock between the drycooler and the indoor cooling units is required. Field-supplied copper wire is required for connection between like-numbered Terminals 70 & 71 on both units for remote On/Off control of the drycooler, synchronized with the indoor unit. Wiring must be sized and selected for insulation class per NEC and other local codes. See Table 9.6 below and Table 9.7 on the next page for recommended wire sizing for control wiring (24 VAC) runs up to 150 ft (45.7m). Contact the factory for assistance with longer wiring runs. See 9.3 on page 53 and9.3 on page 53 and indoor unit manual for location of terminals on drycoolers and indoor units. Refer to the electrical schematics supplied with the drycooler and indoor units for proper wiring of Terminals 70 & 71.

Table 9.6 Minimum recommended control circuit wire size, AWG, 60 Hz models

Control Wire Run, ft (m)	Drycooler Types With Pump Controls													
	DSF	DDF	DSO						DDO					
	Number of Fans								Number of Fans					
	1	1	1	2	3	4	6	8	1	2	3	4	6	8
0-25 (0-7.6)	16	16	16	16	16	16	16	16	16	16	16	16	16	16
26-50 (7.9-15.2)	16	16	16	16	16	16	16	14	16	14	14	14	14	14
51-75 (15.5-22.8)	16	16	16	16	16	16	14	14	14	14	14	12	14	14
76-100 (23.2-30.4)	16	16	16	16	16	16	12	12	12	12	12	12	12	12
101-125 (30.8-38.1)	16	14	16	16	14	14	12	12	12	10	10	10	10	10
126-150 (38.4-45.7)	16	14	16	14	14	14	10	12	10	10	10	10	10	10

Control Wire Run, ft (m)	Drycooler Types Without Pump Controls							
	(D)DNL		(D)DNT					
	Number of Fans							
	1-4	6 & 8	1	2	3	4	6	8
0-25 (0-7.6)	16	16	16	16	16	16	16	16
26-50 (7.9-15.2)	16	16	16	16	16	16	16	16
51-75 (15.5-22.8)	16	16	16	16	16	16	16	14
76-100 (23.2-30.4)	16	16	16	16	16	16	16	12
101-125 (30.8-38.1)	16	16	16	16	16	16	14	12
126-150 (38.4-45.7)	16	16	16	16	16	14	14	10

Data based on 16AWG minimum wire size, 0.4 amp per contactor, 1 to 1.5 Volt maximum drop and 104 °F (40 °C) average ambient temperature.

Table 9.7 Minimum recommended control circuit wire size, mm2, 50Hz models

Control Wire Run, m (ft)	Drycooler Types With Pump Controls													
	DSF	DDF	DSO						DDO					
	Number of Fans													
	1	1	1	2	3	4	6	8	1	2	3	4	6	8
0-7.6 (0-25)	1.0	1.0	1.0	1.0	1.0	1.0	1.0	1.5	1.0	1.5	1.5	1.5	1.5	1.5
7.9-15.2 (26-50)	1.0	1.0	1.0	1.0	1.0	1.0	2.5	2.5	2.5	2.5	2.5	2.5	2.5	2.5
15.5-22.8 (51-75)	1.0	1.5	1.0	1.5	1.5	1.5	4.0	4.0	4.0	4.0	4.0	4.0	4.0	4.0
23.2-30.4 (76-100)	1.0	2.5	1.0	1.5	2.5	2.5	4.0	6.0	4.0	6.0	6.0	6.0	6.0	6.0
30.8-38.1 (101-125)	1.5	2.5	1.5	2.5	2.5	2.5	6.0	6.0	6.0	6.0	6.0	6.0	6.0	6.0
38.4-45.7 (126-150)	1.5	4.0	1.5	2.5	4.0	4.0	6.0	6.0	6.0	6.0	6.0	10.0	6.0	6.0

Control Wire Run, m (ft)	Drycooler Types Without Pump Controls							
	(D)DNL		(D)DNT					
	Number of Fans							
	1-4	6 & 8	1	2	3	4	6	8
0-7.6 (0-25)	1.0	1.0	1.0	1.0	1.0	1.0	1.0	1.0
7.9-15.2 (26-50)	1.0	1.0	1.0	1.0	1.0	1.0	1.0	2.5
15.5-22.8 (51-75)	1.0	1.0	1.0	1.0	1.0	1.5	1.5	4.0
23.2-30.4 (76-100)	1.0	1.0	1.0	1.0	1.0	1.5	2.5	4.0
30.8-38.1 (101-125)	1.0	1.5	1.0	1.5	1.5	2.5	2.5	6.0
38.4-45.7 (126-150)	1.0	1.5	1.0	1.5	1.5	2.5	4.0	6.0

Table based on 1.0 mm2 minimum wire size, 0.5 amp per contactor, 1 to 1.5 Volt maximum drop and 40 °C (104 °F) average ambient temperature.

9.3 Electrical Connection Diagrams

Figure 9.1 Electrical field connections, 1-fan DSF/DDF drycooler with pump control

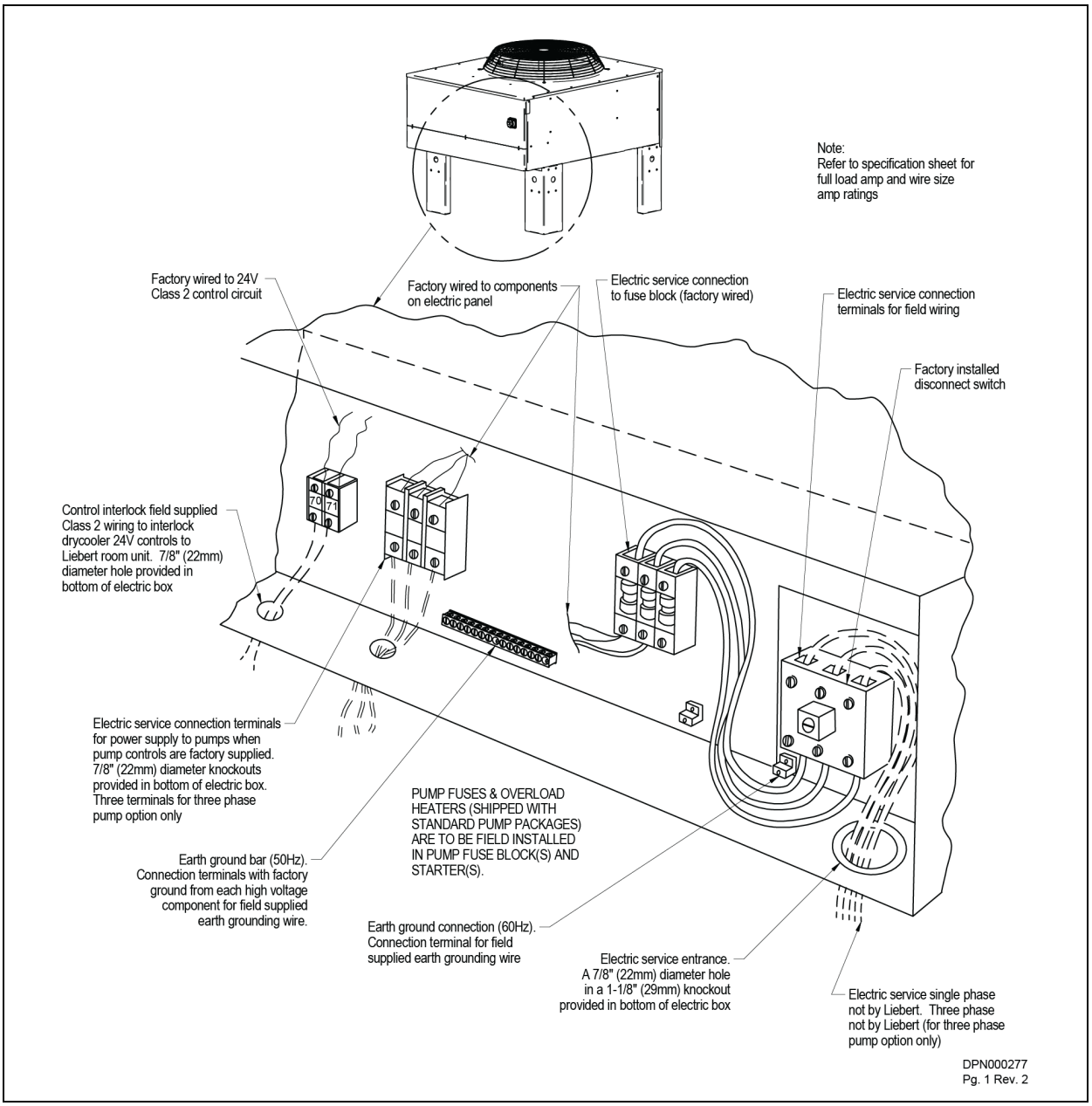

Figure 9.2 Electrical field connections, 1-, 2-, 3- and 4-fan DSO/DDO drycooler with pump control

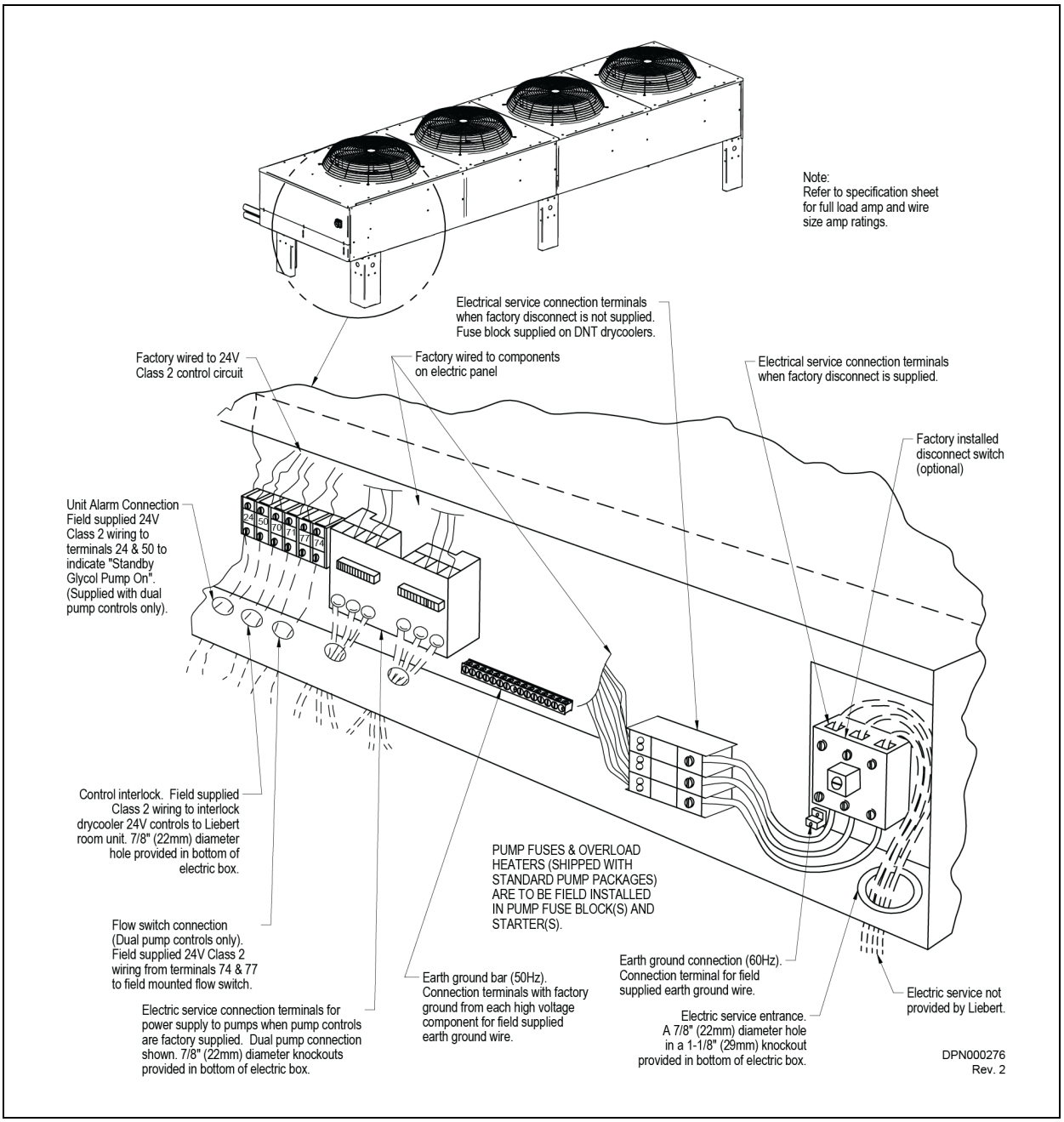

Figure 9.3 Electrical field connections, 6- and 8-fan DSO/DDO drycooler with pump control

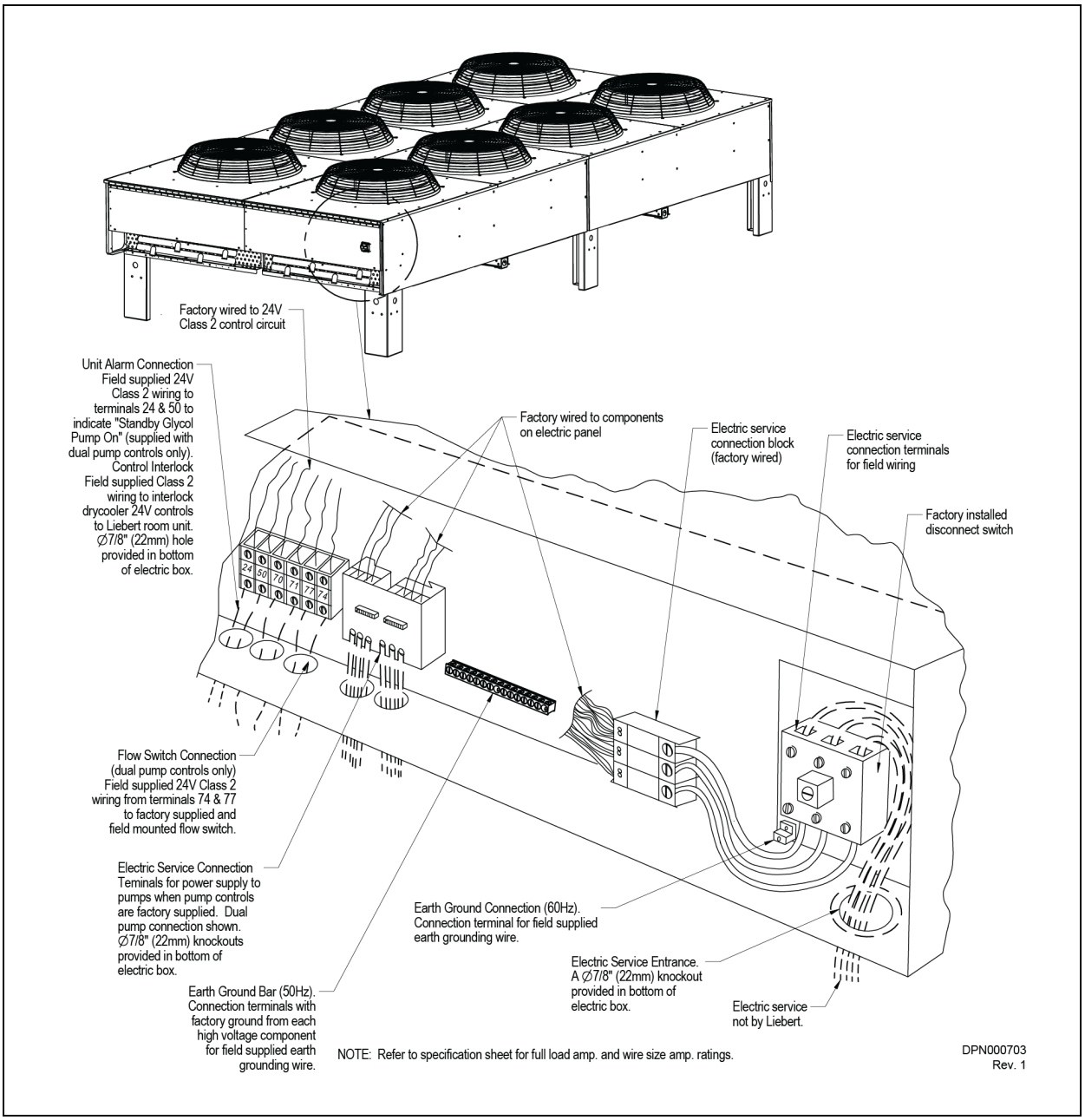

Figure 9.4 Electrical field connections, 6- and 8-fan DDNC drycooler without pump control

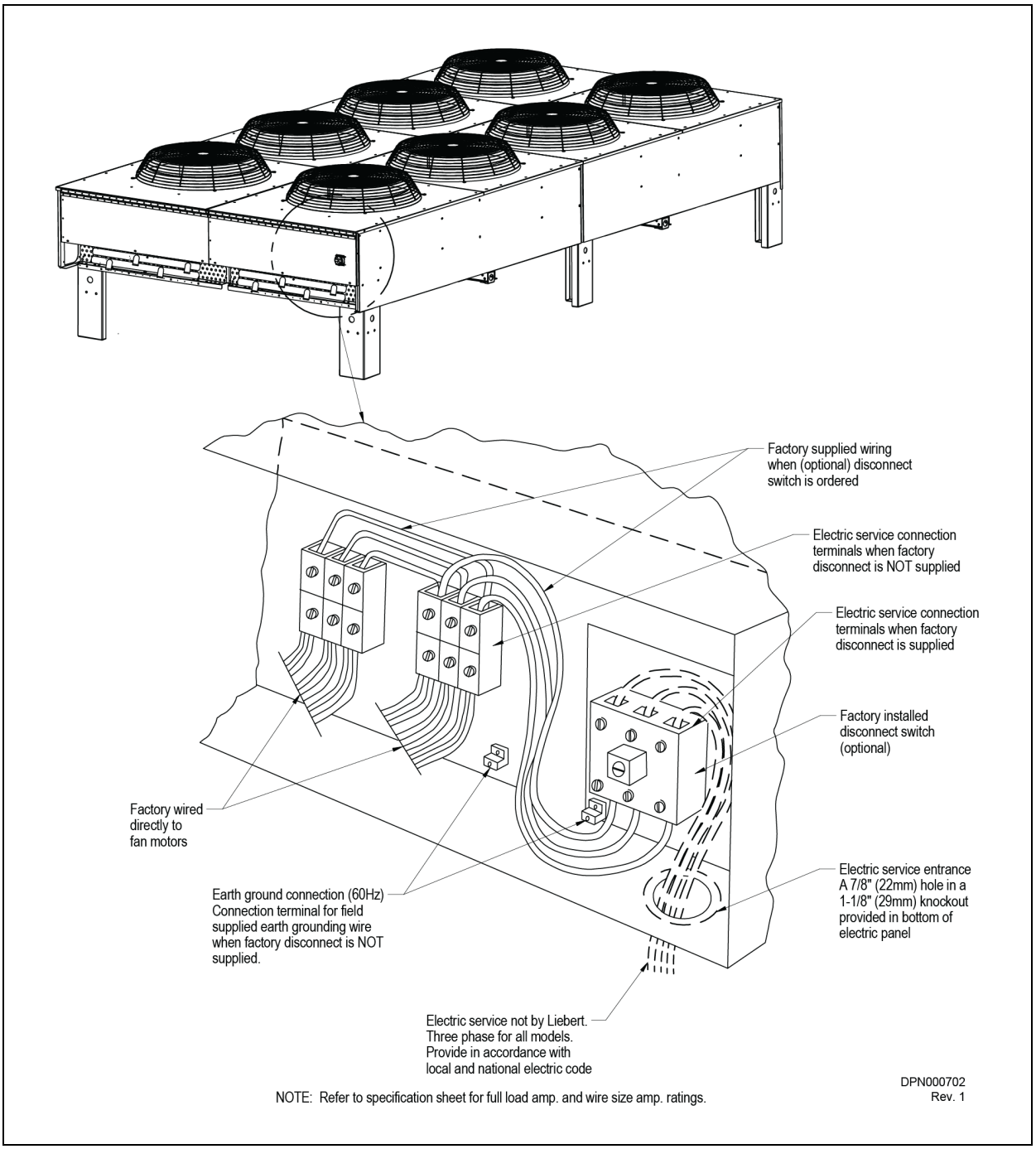

Figure 9.5 Electrical field connections, 6- and 8-fan DDNL/DDNT drycooler without pump control

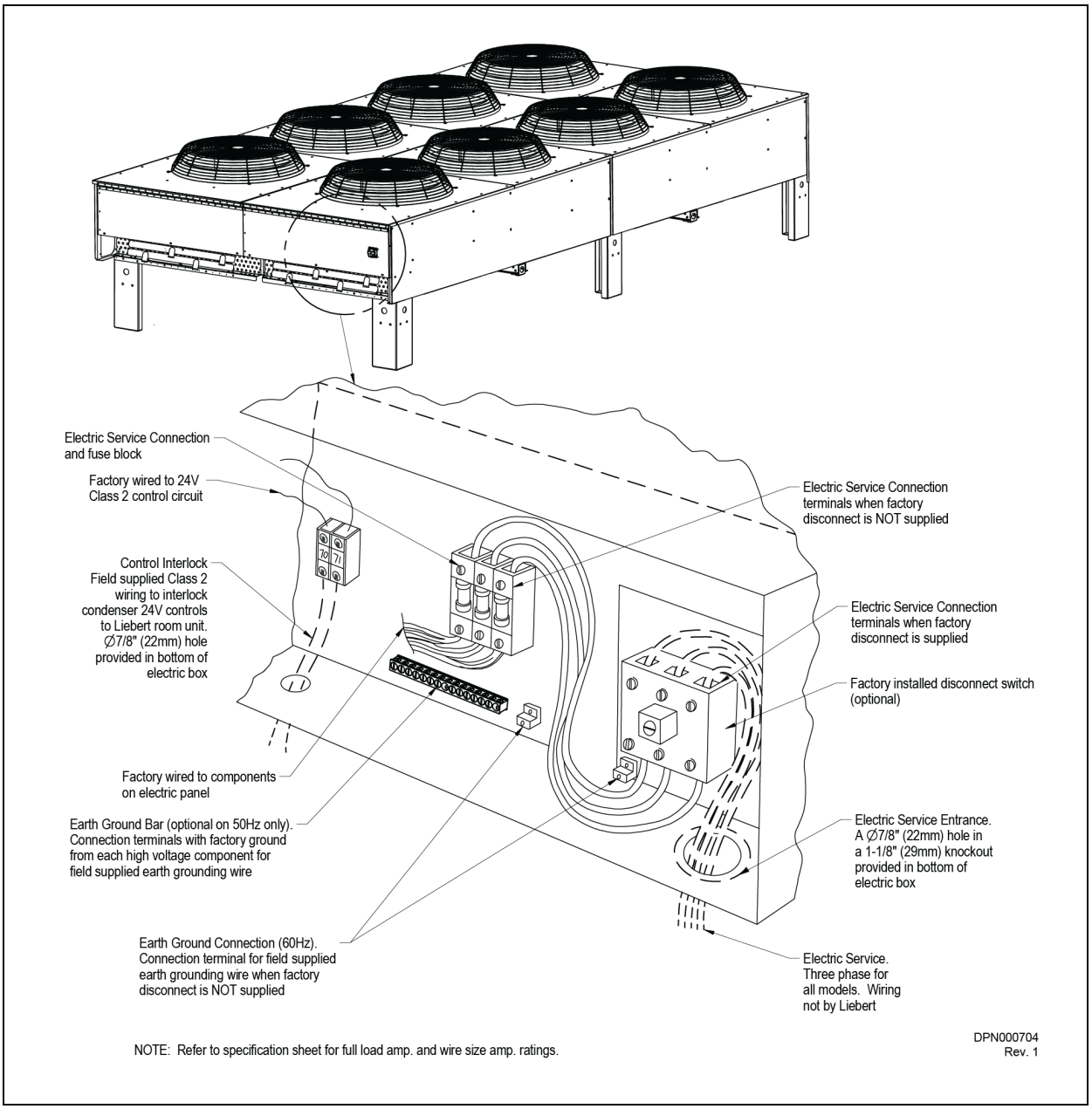

This page intentionally left blank.

10 ENGINEERING DATA, CALCULATIONS AND SELECTION PROCEDURE

An alternate, detailed procedure is available to calculate values and select the correct the Liebert drycooler(s) for the application. This can be used to assist in selecting drycoolers for applications for ambient conditions that are not standard. Use the following steps for 60Hz drycoolers. Contact a sales representative for assistance with 50Hz drycoolers.

1. Determine the following items to begin this procedure:
   - Design outdoor ambient air temperature, T_{oa} (F or C)
   - Fluid Flow Rate, V_T (gpm or lpm)
   - % ethylene glycol concentration
   - Fluid temperatures at drycooler: Entering, T_{ef} and leaving T_{lf} (F or C), or
   - Total Required Heat Rejection, QR_T (kBtu/h or kW) and one of the fluid temperatures above
2. Find the following values using these equations and known values above:
   - Initial Temperature Difference (ITD) of entering fluid to outdoor design air, $ITD = T_{ef} - T_{oa}$
   - Total Required Heat Rejection, $QR_T = V_T * c_v * (T_{ef} - T_{lf})$, where c_v is found in Table 10.1 on the next page, or
   - Leaving fluid temperature, $T_{lf} = T_{ef} - QR_T / (V_T * c_v)$ where c_v is found in Table 1.1 on page 1.
3. Find the Average Fluid Temperature, $T_{f,avg} = (T_{ef} + T_{lf}) / 2$
4. Find Required Heat Rejection per ITD, $QR_{ITD} = QR_T / (ITD * f)$, where *f* is the capacity correction factor found in Figure 10.1 on the next page.
5. Using Table 10.3 on page 61 columns titled Flow Rate Range and THR rate, choose the Drycooler Model matching application fluid flow rate and meeting/exceeding the required Heat Rejection per ITD, QR_{ITD} from Step10 above.
6. Find the Flow Rate per Circuit, $V_C = V_T$ / circuits for the drycooler selected in Table 10.3 on page 61. This should be in the range of 1.5 to 3.0 gpm/circuit (5.7 to 11.4 lpm/circuit) for proper long-term performance.
7. In Table 10.3 on page 61, for the selected Model Number, find the Actual Heat Rejection per ITD using the gpm/circuit from Step10 above. You may interpolate between columns as required. The Actual Heat Rejection per ITD should be equal to or greater than the Required Heat Rejection per ITD, QR_{ITD} (higher altitude application sites should use Table 10.2 on the next page correction factors to reduce Actual Heat Rejection results). If it is less, repeat process from Step10 above using a larger model. If the drycooler solution is oversized, lower capacity drycoolers are available and may be considered as an alternative solution.
8. Calculate the Total Actual Heat Rejection, QA, for the drycooler, using the Actual Heat Rejection per ITD (Step10 above) and actual ITD and correcting for % glycol and AFT (see Figure 10.1 on the next page).

   $QA = QA_{ITD} * ITD * f$

9. After selecting a model, look up the unit's Pressure Drop in Table 10.2 below. Multiply this pressure drop by the correction factor found in Figure 10.2 on the facing page. If the resulting pressure drop is higher than your system design, go back to Step10 on the previous page and select a model with more circuits or consider multiple units. Contact your sales representative for additional design assistance.

Table 10.1 Specific heats for aqueous ethylene glycol solutions (cv)

% Ethylene Glycol	0%	10%	20%	30%	40%	50%
Btu/h/gpm°F	500	490	480	470	450	433
kW/lpm°C	251	245	241	236	226	217

Table 10.2 Altitude correction

Altitude, ft. (m)	0 (0)	1000 (305)	2000 (610)	5000 (1525)	8000 (2440)	12000 (3660)	15000 (4575)
Correction Factor	1.000	0.979	0.960	0.900	0.841	0.762	0.703

Figure 10.1 Capacity correction factor

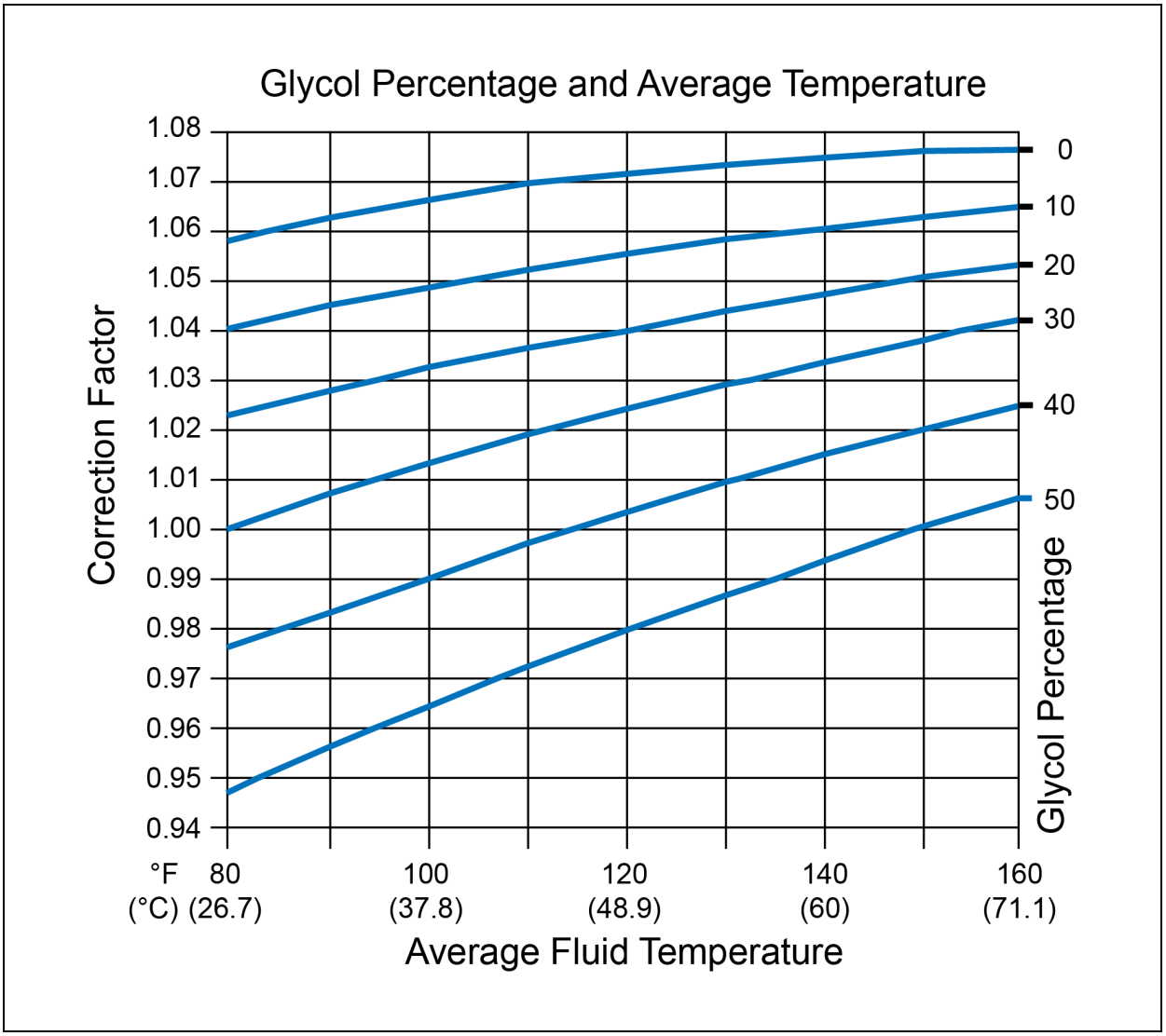

Figure 10.2 Pressure drop correction factor

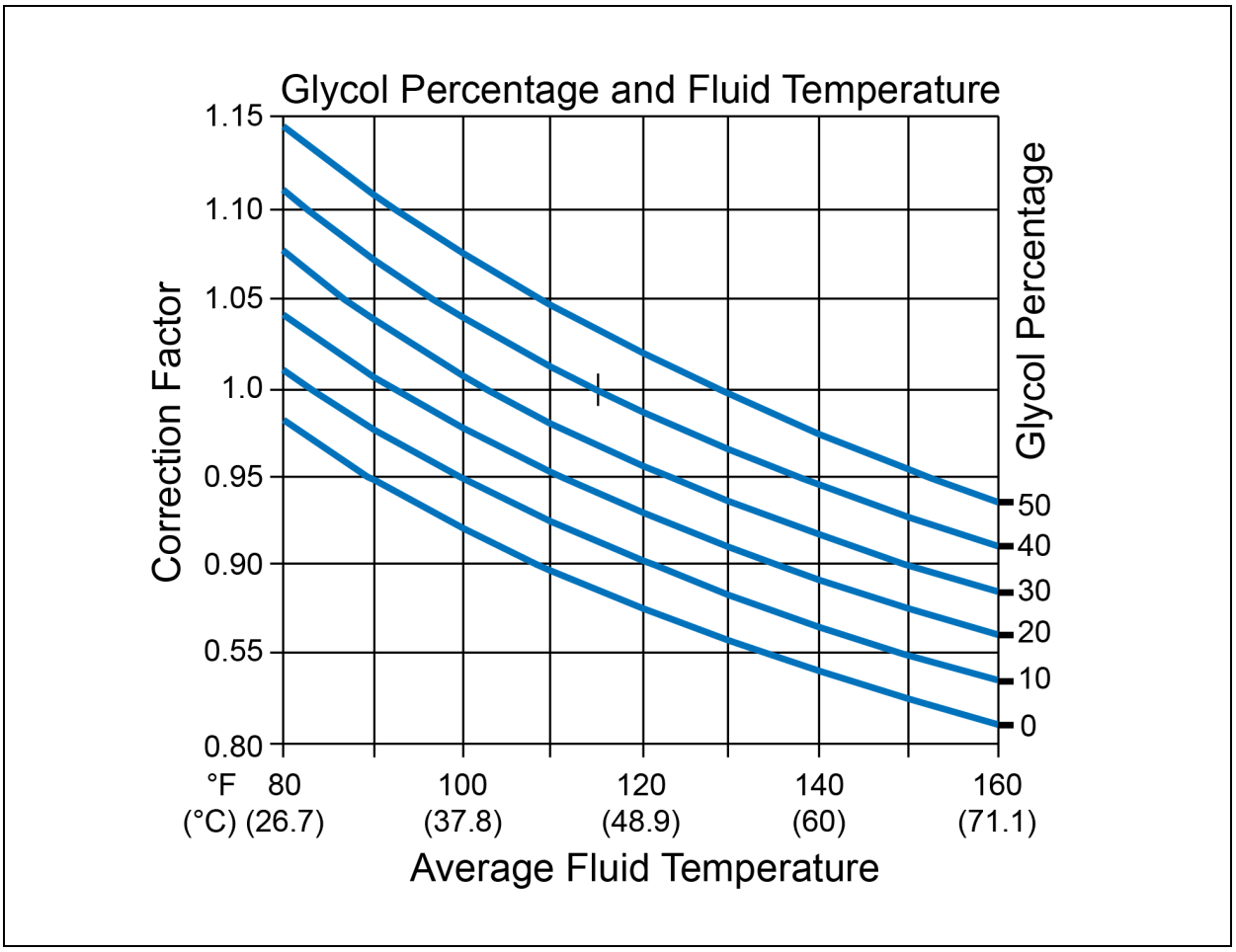

Table 10.3 Drycooler data for engineering calculations/selection, 60Hz

Model #	Flow Rate Range GPM	No. of Circuits	1.5 GPM/CIR (5.7 LPM/CIR)		2.0 GPM/CIR (7.6 LPM/CIR)		2.5 GPM/CIR (9.5 LPM/CIR)		3.0GPM/CIR (11.4 LPM/CIR)	
			THR Rate kBtuh/°F (kW/°C)	Pressure Drop Ft. of H20 (kPa)	THR Rate kBtuh/°F (kW/°C)	Pressure Drop Ft. of H20 (kPa)	THR Rate kBtuh/°F (kW/°C)	Pressure Drop Ft. of H_2O (kPa)	THR Rate kBtuh/°F (kW/°C)	Pressure Drop Ft. of H20 (kPa)
Standard Models										
33	6-12	4*	1.3 (0.69)	4.2 (13)	1.5 (0.79)	6.2 (18)	1.6 (0.84)	9.2 (27)	1.7 (0.89)	12.8 (38)
69	6-12	4	1.8 (0.95)	7.3 (22)	2.1 (1.1)	11.4 (34)	2.3 (1.21)	17 (51)	2.4 (1.26)	23.6 (70)
	12-24	8*	2.3 (1.21)	3.9 (12)	2.5 (1.31)	6 (18)	2.7 (1.42)	8.9 (27)	2.8 (1.47)	12.4 (37)
92	9-18	6	2.7 (1.42)	7 (21)	3 (1.58)	11.7 (35)	3.3 (1.73)	16.7 (50)	3.5 (1.84)	23 (69)
	18-36	12*	3.2 (1.69)	3.7 (11)	3.5 (1.84)	6.2 (18)	3.7 (1.94)	8.7 (26)	3.8 (2)	12.1 (36)
	24-48	16	3.4 (1.79)	3 (9)	3.6 (1.89)	4.6 (14)	3.8 (2)	6.3 (19)	3.9 (2.05)	8.7 (26)

Table 10.3 Drycooler data for engineering calculations/selection, 60Hz (continued)

Model #	Flow Rate Range GPM	No. of Circuits	1.5 GPM/CIR (5.7 LPM/CIR)		2.0 GPM/CIR (7.6 LPM/CIR)		2.5 GPM/CIR (9.5 LPM/CIR)		3.0GPM/CIR (11.4 LPM/CIR)	
			THR Rate kBtuh/°F (kW/°C)	Pressure Drop Ft. of H20 (kPa)	THR Rate kBtuh/°F (kW/°C)	Pressure Drop Ft. of H20 (kPa)	THR Rate kBtuh/°F (kW/°C)	Pressure Drop Ft. of H_20 (kPa)	THR Rate kBtuh/°F (kW/°C)	Pressure Drop Ft. of H20 (kPa)
109	12-24	8	3.3 (1.74)	7.1 (21)	3.7 (1.94)	11.3 (34)	3.9 (2.05)	16.8 (50)	4.1 (2.15)	23.3 (69)
	24-48	16*	3.9 (2.06)	3.8 (11)	4.1 (2.15)	6 (18)	4.3 (2.26)	8.2 (24)	4.5 (2.36)	11.4 (34)
112	12-24	8	3.6 (1.89)	12.2 (36)	4 (2.11)	19.5 (58)	4.3 (2.26)	29.2 (87)	4.51 (2.37)	40.6 (121)
	24-48	16*	4.2 (2.22)	4.6 (14)	4.5 (2.36)	7.3 (22)	4.7 (2.47)	10.2 (30)	4.8 (2.52)	14.1 (42)
	39-78	26	4.5 (2.37)	2.6 (8)	4.7 (2.47)	4.4 (13)	4.9 (2.57)	6.6 (20)	5 (2.63)	9.2 (27)
139	12-24	8	3.6 (1.9)	6.2 (18)	4.1 (2.15)	9.8 (29)	4.6 (2.42)	14.6 (44)	4.9 (2.57)	20.2 (60)
	24-48	16*	4.5 (2.37)	3.3 (10)	5 (2.63)	5.2 (15)	5.4 (2.84)	7.1 (21)	5.6 (2.94)	9.8 (29)
174	12-24	8	4.4 (2.31)	12.5 (37)	5.19 (2.72)	20.2 (60)	5.8 (3.04)	30.1 (90)	6.26 (3.29)	41.9 (125)
	24-48	16*	5.8 (3.06)	4.7 (14)	6.5 (3.41)	7.5 (22)	6.9 (3.62)	10.5 (31)	7.3 (3.83)	14.5 (43)
	36-72	24	6.4 (3.38)	3.2 (10)	7 (3.68)	4.9 (15)	7.4 (3.89)	7.3 (22)	7.6 (3.99)	10.1 (30)
197	12-24	8	4.7 (2.49)	16.5 (49)	5.7 (2.99)	26.8 (80)	6.43 (3.38)	40 (119)	—	—
	24-48	16*	6.5 (3.43)	6.2 (18)	7.3 (3.83)	9.9 (30)	7.9 (4.15)	14.1 (42)	8.2 (4.31)	19.4 (58)
	48-96	32	7.7 (4.06)	3 (9)	8.3 (4.36)	5 (15)	8.7 (4.57)	7 (21)	8.9 (4.67)	9.8 (29)
225	24-48	16	7.1 (3.75)	7.4 (22)	8 (4.2)	12 (36)	8.6 (4.52)	17.2 (51)	9 (4.73)	23.9 (71)
	39-78	26*	8.1 (4.27)	4.4 (13)	8.8 (4.62)	7.4 (22)	9.2 (4.83)	11 (33)	9.5 (4.99)	15.2 (45)
260	24-48	16	7.5 (3.96)	6.4 (19)	8.7 (4.57)	10.2 (30)	9.5 (4.99)	14.7 (44)	10.1 (5.3)	20.3 (60)
	36-72	24*	9.7 (5.12)	4.4 (13)	9.7 (5.09)	6.8 (20)	10.4 (5.46)	10.4 (31)	10.9 (5.72)	14 (42)
310	24-48	16	8.3 (4.38)	8.4 (25)	9.7 (5.09)	13.5 (40)	10.7 (5.62)	19.5 (58)	11.4 (5.99)	26.9 (80)
	48-96	32*	10.7 (5.64)	4.1 (12)	11.7 (6.14)	6.9 (21)	12.4 (6.51)	9.8 (29)	12.9 (6.77)	13.6 (41)
350	24-48	16	9.2 (4.85)	12.2 (36)	10.9 (5.72)	20.9 (62)	12.1 (6.35)	29.1 (87)	12.9 (6.77)	40.2 (120)
	48-96	32*	12.3 (6.49)	6 (18)	13.4 (7.04)	10.1 (30)	14.1 (7.4)	14.6 (44)	14.6 (7.67)	20.2 (60)
	72-144	48	13.4 (7.07)	4.2 (13)	14.2 (7.46)	6.7 (20)	14.8 (7.77)	10 (30)	15.1 (7.93)	13.5 (40)
352	24-48	16	8.8 (4.64)	8.1 (24)	10.4 (5.46)	13.1 (39)	11.6 (6.09)	18.9 (56)	12.5 (6.56)	26.2 (78)
	36-72	24*	10.6 (5.59)	5.5 (16)	12.1 (6.35)	8.7 (26)	13.1 (6.88)	12.9 (38)	13.9 (7.3)	17.9 (53)
419	24-48	16	9.5 (5.01)	10.6 (32)	11.4 (5.99)	17.3 (52)	12.9 (6.77)	25.1 (75)	14 (7.35)	36.7 (109)
	48-96	32*	13.2 (6.96)	5.2 (15)	14.7 (7.72)	8.8 (26)	15.7 (8.24)	12.7 (38)	16.5 (8.66)	17.5 (52)
466	39-78	26	13.1 (6.91)	7.9 (24)	15 (7.88)	13.2 (39)	16.2 (8.51)	19.6 (58)	17.1 (8.98)	27.1 (81)
	60-120	40*	15.2 (8.02)	5.3 (16)	16.7 (8.77)	8.6 (26)	17.6 (9.24)	12.7 (38)	18.3 (9.61)	17.6 (52)
491	24-48	16	10.1 (5.33)	15.6 (46)	12.5 (6.56)	25.6 (76)	—	—	—	—
	48-96	32	14.9 (7.86)	7.7 (23)	16.6 (8.72)	12.9 (38)	17.7 (9.29)	18.9 (56)	18.4 (9.66)	26.1 (78)
	72-144	48*	16.7 (8.81)	5.3 (16)	18 (9.45)	8.6 (26)	18.8 (9.87)	12.8 (38)	19.3 (10.13)	17.4 (52)
620	48-96	32	16.7 (8.81)	8 (24)	19.4 (10.19)	13.3 (40)	21.4 (11.24)	19.4 (58)	22.8 (11.97)	26.9 (80)
	96-192	64*	21.4 (11.29)	4.1 (12)	23.5 (12.34)	6.8 (20)	24.8 (13.02)	9.8 (29)	25.8 (13.55)	13.6 (41)

Table 10.3 Drycooler data for engineering calculations/selection, 60Hz (continued)

Model #	Flow Rate Range GPM	No. of Circuits	1.5 GPM/CIR (5.7 LPM/CIR)		2.0 GPM/CIR (7.6 LPM/CIR)		2.5 GPM/CIR (9.5 LPM/CIR)		3.0GPM/CIR (11.4 LPM/CIR)	
			THR Rate kBtuh/°F (kW/°C)	Pressure Drop Ft. of H20 (kPa)	THR Rate kBtuh/°F (kW/°C)	Pressure Drop Ft. of H20 (kPa)	THR Rate kBtuh/°F (kW/°C)	Pressure Drop Ft. of H_20 (kPa)	THR Rate kBtuh/°F (kW/°C)	Pressure Drop Ft. of H20 (kPa)
650	60-120	40	19.9 (10.5)	8 (24)	22.7 (11.92)	13.1 (39)	24.6 (12.92)	19.5 (58)	26 (13.65)	27 (80)
	78-156	52*	22 (11.61)	6.3 (19)	24.4 (12.81)	10.2 (30)	26.1 (13.7)	15.2 (45)	27.2 (14.28)	20.6 (61)
	120-240	80	24.6 (12.98)	4.1 (12)	26.5 (13.91)	6.7 (20)	27.8 (14.6)	9.9 (30)	28.7 (15.07)	13.4 (40)
700	48-96	32	18.5 (9.76)	11.8 (35)	21.8 (11.45)	19.8 (59)	24.1 (12.65)	29 (86)	—	—
	96-192	64*	24.6 (12.98)	6 (18)	26.8 (14.07)	10 (30)	28.2 (14.81)	14.6 (44)	29.2 (15.33)	20.2 (60)
	144-288	96	26.7 (14.08)	4 (12)	28.5 (14.96)	6.7 (20)	29.5 (15.49)	9.8 (29)	30.2 (15.86)	13.5 (40)
790	48-96	32	18.9 (9.97)	10.2 (30)	22.8 (11.97)	17.1 (51)	25.7 (13.49)	25 (75)	—	—
	96-192	64*	26.4 (13.93)	5.2 (15)	29.4 (15.44)	8.7 (26)	31.5 (16.54)	12.6 (38)	33 (17.33)	17.5 (52)
880	78-156	52	26.2 (13.82)	8.1 (24)	29.9 (15.7)	13.1 (39)	32.4 (17.01)	19.5 (58)	34.2 (17.96)	26.6 (79)
	120-240	80*	30.4 (16.04)	5.2 (15)	33.4 (17.54)	8.5 (25)	35.3 (18.53)	12.7 (38)	36.6 (19.22)	17.3 (52)
940	48-96	32	20.2 (10.66)	15.3 (46)	25 (13.13)	25.4 (76)	—	—	—	—
	96-192	64	29.8 (15.72)	7.7 (23)	33.2 (17.43)	12.9 (38)	35.4 (18.59)	18.8 (56)	36.8 (19.32)	26 (77)
	144-288	96*	33.4 (17.62)	5.1 (15)	35.9 (18.85)	8.6 (26)	37.5 (19.69)	12.6 (38)	38.6 (20.27)	17.4 (52)
Liebert Quiet-Line Models										
40	6-12	4	1.4 (0.74)	7.4 (22)	1.5 (0.79)	11.4 (34)	1.6 (0.84)	17 (51)	1.7 (0.89)	23.5 (70)
	12-24	8*	1.6 (0.84)	3.9 (12)	1.7 (0.89)	5.9 (18)	1.8 (0.95)	8.9 (27)	1.8 (0.95)	12.3 (37)
57	18-36	12*	2.1 (1.11)	3.6 (11)	2.2 (1.16)	6.1 (18)	2.3 (1.21)	8.6 (26)	2.3 (1.21)	11.9 (35)
	24-48	16	2.2 (1.16)	3 (9)	2.3 (1.21)	4.6 (14)	2.3 (1.21)	6.2 (18)	2.4 (1.26)	8.6 (26)
60	12-24	8	2.2 (1.16)	7.1 (21)	2.3 (1.21)	11.3 (34)	2.4 (1.26)	16.6 (49)	2.5 (1.31)	23 (69)
	24-48	16*	2.4 (1.27)	3.8 (11)	2.5 (1.31)	5.9 (18)	2.5 (1.31)	8.1 (24)	2.5 (1.31)	11.3 (34)
80	12-24	8	2.7 (1.42)	6.2 (18)	3 (1.58)	9.8 (29)	3.2 (1.68)	14.5 (43)	3.3 (1.73)	20.1 (60)
	24-48	16*	3.2 (1.69)	3.3 (10)	3.4 (1.79)	5.1 (15)	3.6 (1.89)	7 (21)	3.7 (1.94)	9.7 (29)
111	24-48	16*	4.4 (2.32)	4.7 (14)	4.3 (2.26)	7.4 (22)	4.4 (2.31)	10.4 (31)	4.5 (2.36)	14.3 (43)
	36-72	24	4.2 (2.22)	3.2 (10)	4.4 (2.31)	4.8 (14)	4.6 (2.42)	7.2 (21)	4.6 (2.42)	10 (30)
121	24-48	16*	4.4 (2.32)	6.1 (18)	4.7 (2.47)	9.7 (29)	4.8 (2.52)	13.7 (41)	4.9 (2.57)	18.9 (56)
	48-96	32	4.8 (2.53)	2.9 (9)	4.9 (2.57)	4.9 (15)	5 (2.63)	7 (21)	5.1 (2.68)	9.6 (29)

Table 10.3 Drycooler data for engineering calculations/selection, 60Hz (continued)

Model #	Flow Rate Range GPM	No. of Circuits	1.5 GPM/CIR (5.7 LPM/CIR)		2.0 GPM/CIR (7.6 LPM/CIR)		2.5 GPM/CIR (9.5 LPM/CIR)		3.0GPM/CIR (11.4 LPM/CIR)	
			THR Rate kBtuh/°F (kW/°C)	Pressure Drop Ft. of H20 (kPa)	THR Rate kBtuh/°F (kW/°C)	Pressure Drop Ft. of H20 (kPa)	THR Rate kBtuh/°F (kW/°C)	Pressure Drop Ft. of H_20 (kPa)	THR Rate kBtuh/°F (kW/°C)	Pressure Drop Ft. of H20 (kPa)
158	24-48	16	5.6 (2.95)	6.4 (19)	6 (3.15)	10.3 (31)	6.3 (3.31)	14.7 (44)	6.6 (3.47)	20.3 (60)
	36-72	24*	6 (3.17)	4.3 (13)	6.4 (3.36)	6.7 (20)	6.6 (3.47)	10 (30)	6.8 (3.57)	13.8 (41)
173	24-48	16	6.1 (3.22)	8.4 (25)	6.6 (3.47)	13.5 (40)	6.9 (3.62)	19.5 (58)	7.1 (3.73)	26.9 (80)
	48-96	32*	6.9 (3.64)	4.1 (12)	7.2 (3.78)	6.8 (20)	7.4 (3.89)	9.7 (29)	7.5 (3.94)	13.5 (40)
178	24-48	16	6.5 (3.43)	12.3 (37)	6.9 (3.62)	20 (60)	7.1 (3.73)	29.1 (87)	7.3 (3.83)	40.1 (119)
	48-96	32*	7.1 (3.75)	6 (18)	7.3 (3.83)	10 (30)	7.4 (3.89)	14.5 (43)	7.5 (3.94)	20 (60)
	72-144	48	7.3 (3.85)	4.1 (12)	7.4 (3.89)	6.6 (20)	7.5 (3.94)	9.9 (30)	7.6 (3.99)	13.3 (40)
205	24-48	16	6.9 (3.64)	8.2 (24)	7.7 (4.04)	13.2 (39)	8.2 (4.31)	18.9 (56)	8.6 (4.52)	26.2 (78)
	36-72	24*	7.8 (4.11)	5.5 (16)	8.4 (4.41)	8.7 (26)	8.8 (4.62)	12.9 (38)	9 (4.73)	17.6 (52)
248	24-48	16	7.6 (4.01)	10.7 (32)	8.5 (4.46)	17.4 (52)	9.1 (4.78)	25.2 (75)	9.4 (4.94)	34.8 (104)
	48-96	32*	9.1 (4.8)	5.2 (15)	9.6 (5.04)	8.7 (26)	9.9 (5.2)	12.5 (37)	10.1 (5.3)	17.3 (52)
347	48-96	32	12.2 (6.44)	8 (24)	13.2 (6.93)	13.3 (40)	13.9 (7.3)	19.4 (58)	14.3 (7.51)	26.8 (80)
	96-192	64*	13.8 (7.28)	4.1 (12)	14.4 (7.56)	6.7 (20)	14.8 (7.77)	9.7 (29)	15 (7.88)	13.4 (40)
356	48-96	32	12.9 (6.81)	11.9 (35)	13.8 (7.25)	19.8 (59)	14.3 (7.51)	29 (86)	14.5 (7.61)	40 (119)
	96-192	64*	14.2 (7.49)	6 (18)	14.7 (7.72)	9.9 (30)	14.9 (7.82)	14.4 (43)	15 (7.88)	20 (60)
	144-288	96	14.6 (7.7)	4 (12)	14.9 (7.82)	6.6 (20)	15 (7.88)	9.6 (29)	15.2 (7.98)	13.3 (40)
453	48-96	32	15.2 (8.02)	10.3 (31)	17 (8.93)	17.2 (51)	18.1 (9.5)	25.1 (75)	18.9 (9.92)	34.7 (103)
	96-192	64*	18.2 (9.6)	5.2 (15)	19.2 (10.08)	8.7 (26)	19.9 (10.45)	12.5 (37)	20.3 (10.66)	17.3 (52)
498	48-96	32	16.1 (8.49)	15.4 (46)	17.8 (9.35)	25.6 (76)	18.8 (9.87)	37.6 (112)	19.2 (10.08)	51.8 (154)
	96-192	64	18.8 (9.92)	7.7 (23)	19.5 (10.24)	12.8 (38)	19.9 (10.45)	18.6 (55)	20.1 (10.55)	25.7 (77)
	144-288	96*	19.5 (10.29)	5.1 (15)	20 (10.5)	8.5 (25)	20.2 (10.61)	12.4 (37)	20.4 (10.71)	17.2 (51)

* Denotes standard circuiting

THR Rate data is expressed in kBtuh/°F ITD (kW/°C ITD) and is based on 40% EG solution at 115°F (46.1°C) average solution temperature.

APPENDICES

Appendix A: Guide Specifications for Liebert Air-cooled, Direct-drive Drycooler, 50 Hz and 60 Hz

The following are the guide specifications for the Liebert Drycooler.

This page intentionally left blank.

Liebert® Air-cooled, Direct-drive Drycooler
50 Hz and 60 Hz
Guide Specifications

1.0 General

1.1 SUMMARY

These specifications describe requirements for a Liebert air-cooled drycooler for a Liebert Thermal Management system. The drycooler shall be designed to reject waste heat to outdoor air and to control glycol temperature as pumped glycol rates and outdoor ambient conditions change.

The manufacturer shall design and furnish all equipment in the quantities and configurations shown on the project drawings.

Standard 60Hz units are CSA certified to the harmonized U. S. and Canadian product safety standard CSA C22.2 No 236/UL 1995 for "Heating and Cooling Equipment" and are marked with the CSA c-us logo.

The drycooler model number shall be: _____

1.2 DESIGN REQUIREMENTS

The drycooler shall be a factory-assembled unit, complete with integral electrical panel, designed for outdoor installation and vertical airflow only. (The drycooler shall be a draw-through design.)

The drycooler shall have a total heat rejection capacity of _____ kBtuh (kW) rated at an outdoor ambient of _____ °F (°C), an entering glycol temperature of _____ °F (°C) and a glycol flow rate of _____ GPM (LPM).

The unit is to be supplied for operation using a ____ volt _____phase, _____Hz power supply.

1.3 SUBMITTALS

Submittals shall be provided with the proposal and shall include: Dimensional, Electrical and Capacity data; and Piping and Electrical Connection drawings.

1.4 QUALITY ASSURANCE

The specified system shall be factory-tested before shipment. Testing shall include, but shall not be limited to: Quality Control Checks, "Hi-Pot" Test (two times rated voltage plus 1000V, per NRTL agency requirements) and Metering Calibration Tests. The system shall be designed and manufactured according to world class quality standards. The manufacturer shall be ISO 9001 certified.

2.0 PRODUCT

2.1 STANDARD FEATURES—ALL DRYCOOLERS

The drycooler shall consist of drycooler coil(s), housing, propeller fan(s) direct-driven by individual fan motor(s), electrical controls and mounting legs. The Liebert air-cooled drycooler shall provide glycol temperature control to the indoor cooling unit by adjusting heat rejection capacity. Various methods shall be available to match indoor unit type, minimum outdoor design ambient and maximum sound requirements.

2.2 DRYCOOLER COIL

The Liebert-manufactured coil shall be constructed of copper tubes in a staggered tube pattern. Tubes shall be expanded into continuous, corrugated aluminum fins. The fins shall have full-depth fin collars completely covering the copper tubes, which are connected to heavy wall Type "L" headers. Inlet coil connector tubes pass through relieved holes in the tube sheet for maximum resistance to piping strain and vibration. Coil shall be split flow into multiple coil circuits, combined to yield a drycooler with _____ internal circuits. The supply and return lines shall be (spun shut [1-4 fan models]), (brazed with a cap [6 or 8-fan models]) and shall include a factory-installed Schrader valve. Coils shall be factory leak-tested at a minimum of 300 psig (2068kPag), dehydrated, then filled and sealed with an inert gas holding charge for shipment. Field relief of the Schrader valve shall indicate a leak-free coil.

2.2.1 Housing

The drycooler housing shall be constructed of bright aluminum sheet and divided into individual fan sections by full-width baffles. Structural support members, including coil support frame, motor and drive support, shall be galvanized steel for strength and corrosion resistance. Aluminum legs shall be provided to mount unit for vertical air discharge and shall have rigging holes for hoisting the unit into position. An electrical panel shall be inside an integral NEMA 3R weatherproof section of the housing.

2.2.2 Propeller Fan

The propeller fan shall have aluminum blades secured to a corrosion protected steel hub. Fans shall be secured to the fan motor shaft by means of a keyed hub and dual setscrews. Fan diameter shall be 26" (660mm) or less. Fans shall be factory-balanced and run before shipment. Fan guards shall be heavy gauge, close-mesh steel wire with corrosion-resistant polyester paint finish that shall be rated to pass a 1000-hour salt spray test.

2.2.3 Fan Motor

The fan motor shall be continuous air-over design and shall be equipped with a rain shield and permanently sealed bearing. Motors shall be rigidly mounted on die-formed galvanized steel supports.

2.2.4 Electrical Controls

Electrical controls, overload protection devices and service connection terminals shall be provided and factory-wired inside the integral electrical panel section of the housing. A locking disconnect switch shall be factory-mounted and wired to the electrical panel and controlled via an externally mounted locking door handle. An indoor unit interlock circuit shall enable drycooler operation whenever indoor unit compressors are active. Only supply wiring, indoor unit interlock wiring and high voltage wiring to pumps when controlled by the drycooler shall be required at drycooler installation.

2.3 SPECIFIC FEATURES BY DRYCOOLER TYPE

2.3.1 Fan Speed Control (DSF/DDF) Drycooler (1 Fan) with Integral Pump Control

The DSF/DDF drycooler shall have a fan speed controller that senses the leaving glycol temperature and varying the speed of a FSC duty motor in direct proportion to the heat rejection needs of the system. Fan speed controller shall be factory set to range of 70 to 100°F (21 to 38°C) for glycol-cooled applications. The fan speed control shall be field adjustable to a range of 30 to 60°F (–1 to 16°C) for free-cooling applications. The motor shall be single-phase and include built-in overload protection. The motor shall have an ODP enclosure and a full speed of 1100rpm @ 60Hz (920rpm @ 50Hz). The DSF/DDF drycooler shall control operation of glycol pump(s) powered from the electrical panel. The air-cooled drycooler shall have a ____ volt, 1 ph, ____ Hz power supply.

2.3.2 Fan Cycling Control (DSO/DDO) Drycooler with Integral Pump Control (All Fan Quantities)

The DSO/DDO drycooler shall sense the leaving glycol temperature and cycle fixed speed fans to maintain glycol temperatures. Aquastats shall have field adjustable set-points. The fixed speed motors shall be three-phase and have individual internal overload protection. Fixed speed motors shall have a TEAO enclosure and a full speed of 1140rpm @ 60Hz (950rpm @ 50Hz). The DSO/DDO drycooler shall control operation of glycol pump(s) powered from the electrical panel. The air-cooled drycooler shall have a ____ volt, 3 ph, ____ Hz power supply.

2.3.3 Fan Cycling Control ((D)DNT) Drycooler (All Fan Quantities)

The DDNT/DNT drycooler shall sense the leaving glycol temperature and cycle fixed-speed fans to maintain glycol temperatures. Aquastats shall have field adjustable setpoints. The fixed-speed motors shall be three-phase and have individual internal overload protection. Fixed-speed motors shall have a TEAO enclosure and a full speed of 1140 rpm @ 60Hz (950 rpm @ 50Hz). The air-cooled drycooler shall have a ____ volt, 3 ph, ____ Hz power supply.

2.3.4 Main Fan Control ((D)DNL) Drycooler (All Fan Quantities)

The DDNL/DNL drycooler shall control fixed-speed fans when an external contact closure completes the internal 24VAC circuit. The fixed-speed motors shall be three-phase and have individual internal overload protection. Fixed-speed motors shall have a TEAO enclosure and a full speed of 1140 rpm @ 60Hz (950 rpm @ 50Hz). The air-cooled drycooler shall have a ____ volt, 3 ph, ____ Hz power supply.

2.3.5 No Fan Control ((D)DNC) Drycooler (All Fan Quantities)

The DDNC/DNC drycooler shall activate all fixed-speed fans when supply power is applied to the drycooler. The fixed-speed motors shall be three-phase and have individual internal overload protection. Fixed-speed motors shall have a TEAO enclosure and a full speed of 1140 rpm @ 60Hz (950 rpm @ 50Hz). The air-cooled drycooler shall have a ____ volt, 3 ph, ____ Hz power supply.

2.3.6 Liebert Quiet-Line™ Drycooler (All Fan Quantities)

Liebert Quiet-Line drycoolers shall be available for DSO, DDO, (D)DNT, (D)DNL and (D)DNC control types. The fixed-speed fan motor(s) shall have a TEAO enclosure, provide individual overload protection and have a full speed of 570rpm @ 60Hz (475rpm @ 50Hz) for quiet operation.

2.3.7 Pump Controls

The control for pump(s) up to 7.5hp shall be incorporated into the drycooler electrical panel and shall be available on all Fan Speed and Fan Cycling Control drycoolers. The pump fuses, overload heaters and flow switch (dual pump control models) for the drycooler electrical panel shall be included with the Liebert pump packages or shall be field-supplied for field-supplied pumps.

The dual pump control option shall provide controls for primary and standby pump operation. A flow switch shall be field-installed into glycol piping and wired into the drycooler electrical panel. A loss of glycol flow shall be sensed by the flow switch and the pump controls shall energize the standby pump and de-energize the primary pump. An internal switch shall allow manual selection of the lead/lag pump for the balance of run time.

2.4 ANCILLARY ITEMS

2.4.1 Expansion Tanks, Fluid Relief Valves, Air Management and Other Devices

An expansion tank shall be provided for expansion and contraction of the glycol fluid due to temperature change in the closed system. The tank and air vents shall be field-installed at the system's highest elevation to allow venting of trapped air. A fluid pressure relief valve shall be provided for system safety. The system shall include (tank-steel [expansion, compression, diaphragm, bladder], air separator, air vent, fluid pressure relief valve, pressure gauges, flow switches, tempering valves, [primary, primary and standby] pumps, supply and return piping).

3.0 Execution

3.1 INSTALLATION OF AIR CONDITIONING UNIT

3.1.1 General

The air conditioning unit shall be installed in accordance with the manufacturer's installation instructions. Install unit plumb and level, firmly anchored in location indicated, and maintain manufacturer's recommended clearances.

3.1.2 Electrical Wiring

Install and connect electrical devices furnished by manufacturer but not specified to be factory-mounted. Furnish a copy of the manufacturer's electrical connection diagram submittal to the electrical contractor. Install and wire per local and national codes.

3.1.3 Piping Connections

Install and connect devices furnished by manufacturer but not specified to be factory-mounted. Furnish a copy of manufacturer's piping connection diagram submittal to the piping contractor.

3.1.4 Field Quality Control

Start cooling units in accordance with manufacturer's startup instructions. Test controls and demonstrate compliance with requirements. These specifications describe requirements for a computer room environmental control system. The system shall be designed to maintain temperature and humidity conditions in the rooms containing electronic equipment.

The manufacturer shall design and furnish all equipment to be fully compatible with heat dissipation requirements.

VertivCo.com | Vertiv Headquarters, 1050 Dearborn Drive, Columbus, OH, 43085, USA

SL-10058_REV5_10-17/590-1693-501A